03-1809-CD
STATE FARM INSURANCE, etal. vs. FRANK GODISSART, etal.

PARTY HISTORY

Cases

Godissart, Frank

Case	Role	Status Violation / Filing Date	Restitution Balance Balance Due
2003-01809-CD	Defendant	Pending	
State Farm Insurance Company, etal. vs. Frank Godissart, etal.		12/08/2003	

1 Case

IN THE COURT OF COMMON PLEAS OF CLEARFIELD COUNTY, PENNSYLVANIA

STATE FARM INSURANCE COMPANY as subrogee of Thomas and Mona Rauch,

Plaintiff,

v.

FRANK GODISSART and RICHARD BLOOM,

Defendants.

CIVIL DIVISION - ARBITRATION

No. 03-1809-CD

COMPLAINT

Filed on behalf of Plaintiff:
State Farm Insurance Company as subrogee of Thomas and Mona Rauch

Counsel of Record for this Party:

Christopher P. Deegan, Esquire
PA I.D. #85635

WEBER GALLAGHER SIMPSON STAPLETON FIRES & NEWBY, LLP
Firm #594

Two Gateway Center
14th Floor
Pittsburgh, PA 15222

(412) 281-4541

JURY TRIAL DEMANDED

IN THE COURT OF COMMON PLEAS OF CLEARFIELD COUNTY, PENNSYLVANIA

STATE FARM INSURANCE COMPANY as subrogee of Thomas and Mona Rauch,

Plaintiff,

v.

FRANK GODISSART and RICHARD BLOOM,

Defendants.

CIVIL DIVISION - ARBITRATION

No.

NOTICE TO DEFEND

YOU HAVE BEEN SUED IN COURT. If you wish to defend against the claims set forth in the following pages, you must take action within TWENTY (20) days after this complaint and notice are served, by entering a written appearance personally or by attorney and filing in writing with the court your defenses or objections to the claims set forth against you. You are warned that if you fail to do so the case may proceed without you and a judgment may be entered against you by the court without further notice for any money claimed in the complaint or for any claim or relief requested by the plaintiff. You may lose money or property or other rights important to you. YOU SHOULD TAKE THIS PAPER TO YOUR LAWYER AT ONCE. IF YOU DO NOT HAVE A LAWYER, TELEPHONE THE OFFICE SET FORTH BELOW TO FIND OUT WHERE YOU CAN GET LEGAL HELP. IF YOU CANNOT AFFORD A LAWYER, THIS OFFICE MAY BE ABLE TO PROVIDE YOU WITH INFORMATION ON AGENCIES THAT MAY OFFER LEGAL SERVICES TO ELIGIBLE PERSONS AT A REDUCED FEE OR NO FEE.

David S. Meholick
Court Administrator
Clearfield County Courthouse
Clearfield, PA 16830
(814) 765-2641 ext. 5982

IN THE COURT OF COMMON PLEAS OF CLEARFIELD COUNTY, PENNSYLVANIA

STATE FARM INSURANCE COMPANY as subrogee of Thomas and Mona Rauch,	CIVIL DIVISION - ARBITRATION
	No.
Plaintiff,	
v.	
FRANK GODISSART and RICHARD BLOOM,	
Defendants.	

COMPLAINT

AND NOW comes plaintiff, State Farm Insurance Company as subrogee of Thomas and Mona Rauch, by and through its attorney, Christopher P. Deegan, Esquire and Weber Gallagher Simpson Stapleton Fires & Newby LLP, and files the following Complaint:

1. Plaintiff, State Farm Insurance Company as subrogee of Thomas and Mona Rauch (hereinafter referred to as "State Farm"), is a corporation doing business in the Commonwealth of Pennsylvania at P.O. Box 1015, Concordville, Pennsylvania 19331.

2. Thomas and Mona Rauch (hereinafter referred to as "the Rauches"), are individuals residing at P.O. Box 443, Deacon Road, Clearfield, Clearfield County, Pennsylvania 16830.

3. The Rauches are the holders of a homeowner's policy of insurance which was issued by State Farm and, at all times relevant hereto, this policy was in effect and covered the property owned by the Rauches at P.O. Box 443 Deacon Road, Clearfield, Clearfield County, Pennsylvania 16830.

4. Defendant, Frank Godissart (hereinafter referred to as "Godissart"), is an individual residing

at R.R. 2, Clearfield, Clearfield County, Pennsylvania 16830.

5. At all times relevant hereto, Godissart was the general contractor for the construction of the Rauches' home.

6. Defendant, Richard Bloom (hereinafter referred to as "Bloom"), is an individual residing at 9190 Curwensville Tyrone, Olanta, Clearfield County, Pennsylvania 16863.

7. At all times relevant hereto, the Rauches contracted with Godissart regarding the construction of a new home.

8. As part of their construction of the home, certain appliances were to be installed by Godissart including, but not limited to, a Slant Fin Corporation Liberty II oil-fired hot water boiler.

9. Godissart subcontracted Bloom with regard to the installation of said hot water boiler.

10. Bloom installed the hot water boiler in or about the fall of 1999.

11. On or about January 23, 2002, black soot discharged from the hot water boiler throughout the Rauches' home, causing severe soot damage to the home and its contents.

12. Furthermore, as a result of the soot damage, the Rauches were forced to find alternative living arrangements for a period of time following the incident.

COUNT I - NEGLIGENCE

State Farm Insurance Company as subrogee of Thomas and Mona Rauch v. Frank Godissart

13. Plaintiff incorporates by reference Paragraphs 1 through 12 as if set forth in full herein.

14. The negligent and careless conduct of Godissart in his position as the general contractor and builder of the Rauches' home and his agents and/or employees and/or representatives was the direct and proximate cause of the aforementioned damages suffered by the Rauches and this conduct is more

particularly set forth below:

a. In failing to properly install the hot water boiler;

b. In failing to test the hot water boiler after it was installed;

c. In failing to electrically interlock the auxiliary exhaust draft fan pressure switch with the burner controls;

d. In failing to set up the burner with adequate combustion air for a smoke index of zero and 0.02" W.C. overfire draft;

e. In failing to set burner electrodes, set the fuel pressure, set the air fuel mixture by CO, CO_2 or O_2 in the flue gases, and tighten down the air shutter set screws;

f. In failing to install an in-line supply fuel filter on the inlet to the burner;

g. In failing to install the barometric draft damper at least 18 inches above the boiler outlet;

h. In negligently supervising his agents and/or employees and/or representatives who acted or omitted to act as described above;

i. In negligently training those agents and/or employees and/or representatives who acted or omitted to act as described above;

j. In generally failing to install the hot water boiler in a proper, safe and workman-like manner;

k. In failing to warn the Rauches of the chance that the hot water boiler may discharge soot throughout the home;

l. In negligently hiring and contracting with a negligent and careless hot water boiler installer;

m. In otherwise failing to exercise due care under the circumstances described above.

WHEREFORE, plaintiff, State Farm Insurance Company as subrogee of Thomas and Mona Rauch, demands judgment in its favor and against defendant, Frank Godissart, in the amount of $23,198.21, exclusive of costs and interest.

COUNT I I - BREACH OF CONTRACT

State Farm Insurance Company as subrogee of Thomas and Mona Rauch v. Frank Godissart

15. Plaintiff incorporates by reference Paragraphs 1 through 14 as if set forth in full herein.

16. Godissart did breach his contract with the Rauches in general and in the following particulars:

a. In failing to properly install the hot water boiler;

b. In failing to test the hot water boiler after it was installed;

c. In failing to electrically interlock the auxiliary exhaust draft fan pressure switch with the burner controls;

d. In failing to set up the burner with adequate combustion air for a smoke index of zero and 0.02" W.C. overfire draft;

e. In failing to set burner electrodes, set the fuel pressure, set the air fuel mixture by CO, CO_2 or O_2 in the flue gases, and tighten down the air shutter set screws;

f. In failing to install an in-line supply fuel filter on the inlet to the burner;

g. In failing to install the barometric draft damper at least 18 inches above the boiler outlet;

h. In negligently supervising his agents and/or employees and/or representatives who acted or omitted to act as described above;

i. In negligently training those agents and/or employees

and/or representatives who acted or omitted to act as described above;

j. In generally failing to install the hot water boiler in a proper, safe and workman-like manner;

k. In failing to warn the Rauches of the chance that the hot water boiler may discharge soot throughout the home;

l. In negligently hiring and contracting with a negligent and careless hot water boiler installer;

m. In otherwise failing to exercise due care under the circumstances described above.

WHEREFORE, plaintiff, State Farm Insurance Company as subrogee of Thomas and Mona Rauch, demands judgment in its favor and against defendant, Frank Godissart, in the amount of $23,198.21, exclusive of costs and interest.

COUNT III - NEGLIGENCE

State Farm Insurance Company as subrogee of Thomas and Mona Rauch v. Richard Bloom

17. Plaintiff incorporates by reference Paragraphs 1 through 16 as if set forth in full herein.

18. The negligent and careless conduct of Bloom was the direct and proximate cause of the aforementioned damages suffered by the Rauches and this conduct is more particularly set forth below:

a. In failing to properly install the hot water boiler;

b. In failing to test the hot water boiler after it was installed;

c. In failing to electrically interlock the auxiliary exhaust draft fan pressure switch with the burner controls;

d. In failing to set up the burner with adequate combustion air for a smoke index of zero and 0.02" W.C. overfire draft;

e. In failing to set burner electrodes, set the fuel pressure, set the air fuel mixture by CO, CO_2 or O_2 in the flue gases, and tighten down the air shutter set screws;

f. In failing to install an in-line supply fuel filter on the inlet to the burner;

g. In failing to install the barometric draft damper at least 18 inches above the boiler outlet;

h. In generally failing to install the hot water boiler in a proper, safe and workman-like manner;

i. In failing to warn the Rauches of the chance that the hot water boiler may discharge soot throughout the home;

j. In otherwise failing to exercise due care under the circumstances described above.

WHEREFORE, plaintiff, State Farm Insurance Company as subrogee of Thomas and Mona Rauch, demands judgment in its favor and against defendant, Richard Bloom, in the amount of $23,198.21, exclusive of costs and interest.

COUNT III - BREACH OF CONTRACT

State Farm Insurance Company as subrogee of Thomas and Mona Rauch v. Richard Bloom

19. Plaintiff incorporates by reference Paragraphs 1 through 18 as if set forth in full herein.

20. The negligent and careless conduct of Bloom was the direct and proximate cause of the aforementioned damages suffered by the Rauches and this conduct is more particularly set forth below:

a. In failing to properly install the hot water boiler;

b. In failing to test the hot water boiler after it was installed;

c. In failing to electrically interlock the auxiliary exhaust draft fan pressure switch with the burner controls;

d. In failing to set up the burner with adequate combustion air for a smoke index of zero and 0.02" W.C. overfire draft;

e. In failing to set burner electrodes, set the fuel pressure, set the air fuel mixture by CO, CO_2 or O_2 in the flue gases, and tighten down the air shutter set screws;

f. In failing to install an in-line supply fuel filter on the inlet to the burner;

g. In failing to install the barometric draft damper at least 18 inches above the boiler outlet;

h. In generally failing to install the hot water boiler in a proper, safe and workman-like manner;

i. In failing to warn the Rauches of the chance that the hot water boiler may discharge soot throughout the home;

j. In otherwise failing to exercise due care under the circumstances described above.

WHEREFORE, plaintiff, State Farm Insurance Company as subrogee of Thomas and Mona Rauch, demands judgment in its favor and against defendant, Richard Bloom, in the amount of $23,198.21, exclusive of costs and interest.

Respectfully submitted,

WEBER GALLAGHER SIMPSON STAPLETON
FIRES & NEWBY LLP

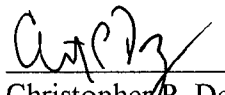

Christopher P. Deegan, Esquire
Counsel for Plaintiff

VERIFICATION

I, Margot Subokow, as a representative of State Farm, verify that the statements made in the Complaint are true and correct to the best of my knowledge. I understand that false statements herein are made subject to the penalties of 18 Pa.C.S.A. Section 4904 relating to unsworn falsification to authorities.

Margot Subokow for State Farm

Margot Subokow

Dated: 11/4/03

In The Court of Common Pleas of Clearfield County, Pennsylvania

STATE FARM INSURANCE COMPANY

VS.

GODISSART, FRANK and RICHARD BLOOM

COMPLAINT

Sheriff Docket # 14904

03-1809-CD

SHERIFF RETURNS

NOW JANUARY 7, 2004 AT 10:37 AM SERVED THE WITHIN COMPLAINT ON FRANK GODISSART, DEFENDANT AT RESIDENCE, RR#2 (642 Knepp Road), CLEARFIELD, CLEARFIELD COUNTY, PENNSYLVANIA BY HANDING TO FRANK GODISSART A TRUE AND ATTESTED COPY OF THE ORIGINAL COMPLAINT AND MADE KNOWN TO HIM THE CONTENTS THEREOF.
SERVED BY: RYEN

NOW JANUARY 16, 2004 AFTER DILIGENT SEARCH IN MY BAILIWICK I RETURN THE WITHIN COMPLAINT "NOT SERVED, TIME EXPIRED" AS TO RICHARD BLOOM, DEFENDANT. SEVERAL ATTEMPTS NOT HOME.

Return Costs

Cost	Description
45.84	SHERIFF HAWKINS PAID BY: ATTY Cke 6871
20.00	SURCHARGE PAID BY: ATTY CK# 6895

Sworn to Before Me This

16th Day Of Jan 2004

WILLIAM A. SHAW
Prothonotary
My Commission Expires
1st Monday in Jan. 2006
Clearfield Co., Clearfield, PA

So Answers,

Chester A. Hawkins
Sheriff

FILED
01:30 PM
JAN 16 2004

William A. Shaw
Prothonotary/Clerk of Courts

IN THE COURT OF COMMON PLEAS OF CLEARFIELD COUNTY, PENNSYLVANIA

STATE FARM INSURANCE COMPANY as subrogee of Thomas and Mona Rauch,

Plaintiff,

v.

FRANK GODISSART and RICHARD BLOOM,

Defendants.

CIVIL DIVISION - ARBITRATION

No. 03-1809-LD

COMPLAINT

Filed on behalf of Plaintiff:
State Farm Insurance Company as subrogee of Thomas and Mona Rauch

Counsel of Record for this Party:

Christopher P. Deegan, Esquire
PA I.D. #85635

WEBER GALLAGHER SIMPSON STAPLETON FIRES & NEWBY, LLP
Firm #594

Two Gateway Center
14th Floor
Pittsburgh, PA 15222

(412) 281-4541

JURY TRIAL DEMANDED

I hereby certify this to be a true and attested copy of the original statement filed in this case.

DEC 08 2003

Attest.

Prothonotary/
Clerk of Courts

IN THE COURT OF COMMON PLEAS OF CLEARFIELD COUNTY, PENNSYLVANIA

STATE FARM INSURANCE COMPANY as subrogee of Thomas and Mona Rauch,

Plaintiff,

v.

FRANK GODISSART and RICHARD BLOOM,

Defendants.

CIVIL DIVISION - ARBITRATION

No.

NOTICE TO DEFEND

YOU HAVE BEEN SUED IN COURT. If you wish to defend against the claims set forth in the following pages, you must take action within TWENTY (20) days after this complaint and notice are served, by entering a written appearance personally or by attorney and filing in writing with the court your defenses or objections to the claims set forth against you. You are warned that if you fail to do so the case may proceed without you and a judgment may be entered against you by the court without further notice for any money claimed in the complaint or for any claim or relief requested by the plaintiff. You may lose money or property or other rights important to you. YOU SHOULD TAKE THIS PAPER TO YOUR LAWYER AT ONCE. IF YOU DO NOT HAVE A LAWYER, TELEPHONE THE OFFICE SET FORTH BELOW TO FIND OUT WHERE YOU CAN GET LEGAL HELP. IF YOU CANNOT AFFORD A LAWYER, THIS OFFICE MAY BE ABLE TO PROVIDE YOU WITH INFORMATION ON AGENCIES THAT MAY OFFER LEGAL SERVICES TO ELIGIBLE PERSONS AT A REDUCED FEE OR NO FEE.

David S. Meholick
Court Administrator
Clearfield County Courthouse
Clearfield, PA 16830
(814) 765-2641 ext. 5982

IN THE COURT OF COMMON PLEAS OF CLEARFIELD COUNTY, PENNSYLVANIA

STATE FARM INSURANCE COMPANY as subrogee of Thomas and Mona Rauch,

Plaintiff,

v.

FRANK GODISSART and RICHARD BLOOM,

Defendants.

CIVIL DIVISION - ARBITRATION

No.

COMPLAINT

AND NOW comes plaintiff, State Farm Insurance Company as subrogee of Thomas and Mona Rauch, by and through its attorney, Christopher P. Deegan, Esquire and Weber Gallagher Simpson Stapleton Fires & Newby LLP, and files the following Complaint:

1. Plaintiff, State Farm Insurance Company as subrogee of Thomas and Mona Rauch (hereinafter referred to as "State Farm"), is a corporation doing business in the Commonwealth of Pennsylvania at P.O. Box 1015, Concordville, Pennsylvania 19331.

2. Thomas and Mona Rauch (hereinafter referred to as "the Rauches"), are individuals residing at P.O. Box 443, Deacon Road, Clearfield, Clearfield County, Pennsylvania 16830.

3. The Rauches are the holders of a homeowner's policy of insurance which was issued by State Farm and, at all times relevant hereto, this policy was in effect and covered the property owned by the Rauches at P.O. Box 443 Deacon Road, Clearfield, Clearfield County, Pennsylvania 16830.

4. Defendant, Frank Godissart (hereinafter referred to as "Godissart"), is an individual residing

at R.R. 2, Clearfield, Clearfield County, Pennsylvania 16830.

5. At all times relevant hereto, Godissart was the general contractor for the construction of the Rauches' home.

6. Defendant, Richard Bloom (hereinafter referred to as "Bloom"), is an individual residing at 9190 Curwensville Tyrone, Olanta, Clearfield County, Pennsylvania 16863.

7. At all times relevant hereto, the Rauches contracted with Godissart regarding the construction of a new home.

8. As part of their construction of the home, certain appliances were to be installed by Godissart including, but not limited to, a Slant Fin Corporation Liberty II oil-fired hot water boiler.

9. Godissart subcontracted Bloom with regard to the installation of said hot water boiler.

10. Bloom installed the hot water boiler in or about the fall of 1999.

11. On or about January 23, 2002, black soot discharged from the hot water boiler throughout the Rauches' home, causing severe soot damage to the home and its contents.

12. Furthermore, as a result of the soot damage, the Rauches were forced to find alternative living arrangements for a period of time following the incident.

COUNT I - NEGLIGENCE

State Farm Insurance Company as subrogee of Thomas and Mona Rauch v. Frank Godissart

13. Plaintiff incorporates by reference Paragraphs 1 through 12 as if set forth in full herein.

14. The negligent and careless conduct of Godissart in his position as the general contractor and builder of the Rauches' home and his agents and/or employees and/or representatives was the direct and proximate cause of the aforementioned damages suffered by the Rauches and this conduct is more

particularly set forth below:

a. In failing to properly install the hot water boiler;

b. In failing to test the hot water boiler after it was installed;

c. In failing to electrically interlock the auxiliary exhaust draft fan pressure switch with the burner controls;

d. In failing to set up the burner with adequate combustion air for a smoke index of zero and 0.02" W.C. overfire draft;

e. In failing to set burner electrodes, set the fuel pressure, set the air fuel mixture by CO, CO_2 or O_2 in the flue gases, and tighten down the air shutter set screws;

f. In failing to install an in-line supply fuel filter on the inlet to the burner;

g. In failing to install the barometric draft damper at least 18 inches above the boiler outlet;

h. In negligently supervising his agents and/or employees and/or representatives who acted or omitted to act as described above;

i. In negligently training those agents and/or employees and/or representatives who acted or omitted to act as described above;

j. In generally failing to install the hot water boiler in a proper, safe and workman-like manner;

k. In failing to warn the Rauches of the chance that the hot water boiler may discharge soot throughout the home;

l. In negligently hiring and contracting with a negligent and careless hot water boiler installer;

m. In otherwise failing to exercise due care under the circumstances described above.

WHEREFORE, plaintiff, State Farm Insurance Company as subrogee of Thomas and Mona Rauch, demands judgment in its favor and against defendant, Frank Godissart, in the amount of $23,198.21, exclusive of costs and interest.

COUNT I I - BREACH OF CONTRACT

State Farm Insurance Company as subrogee of Thomas and Mona Rauch v. Frank Godissart

15. Plaintiff incorporates by reference Paragraphs 1 through 14 as if set forth in full herein.

16. Godissart did breach his contract with the Rauches in general and in the following particulars:

a. In failing to properly install the hot water boiler;

b. In failing to test the hot water boiler after it was installed;

c. In failing to electrically interlock the auxiliary exhaust draft fan pressure switch with the burner controls;

d. In failing to set up the burner with adequate combustion air for a smoke index of zero and 0.02" W.C. overfire draft;

e. In failing to set burner electrodes, set the fuel pressure, set the air fuel mixture by CO, CO_2 or O_2 in the flue gases, and tighten down the air shutter set screws;

f. In failing to install an in-line supply fuel filter on the inlet to the burner;

g. In failing to install the barometric draft damper at least 18 inches above the boiler outlet;

h. In negligently supervising his agents and/or employees and/or representatives who acted or omitted to act as described above;

i. In negligently training those agents and/or employees

and/or representatives who acted or omitted to act as described above;

j. In generally failing to install the hot water boiler in a proper, safe and workman-like manner;

k. In failing to warn the Rauches of the chance that the hot water boiler may discharge soot throughout the home;

l. In negligently hiring and contracting with a negligent and careless hot water boiler installer;

m. In otherwise failing to exercise due care under the circumstances described above.

WHEREFORE, plaintiff, State Farm Insurance Company as subrogee of Thomas and Mona Rauch, demands judgment in its favor and against defendant, Frank Godissart, in the amount of $23,198.21, exclusive of costs and interest.

COUNT III - NEGLIGENCE

State Farm Insurance Company as subrogee of Thomas and Mona Rauch v. Richard Bloom

17. Plaintiff incorporates by reference Paragraphs 1 through 16 as if set forth in full herein.

18. The negligent and careless conduct of Bloom was the direct and proximate cause of the aforementioned damages suffered by the Rauches and this conduct is more particularly set forth below:

a. In failing to properly install the hot water boiler;

b. In failing to test the hot water boiler after it was installed;

c. In failing to electrically interlock the auxiliary exhaust draft fan pressure switch with the burner controls;

d. In failing to set up the burner with adequate combustion air for a smoke index of zero and 0.02" W.C. overfire draft;

e. In failing to set burner electrodes, set the fuel pressure, set the air fuel mixture by CO, CO_2 or O_2 in the flue gases, and tighten down the air shutter set screws;

f. In failing to install an in-line supply fuel filter on the inlet to the burner;

g. In failing to install the barometric draft damper at least 18 inches above the boiler outlet;

h. In generally failing to install the hot water boiler in a proper, safe and workman-like manner;

i. In failing to warn the Rauches of the chance that the hot water boiler may discharge soot throughout the home;

j. In otherwise failing to exercise due care under the circumstances described above.

WHEREFORE, plaintiff, State Farm Insurance Company as subrogee of Thomas and Mona Rauch, demands judgment in its favor and against defendant, Richard Bloom, in the amount of $23,198.21, exclusive of costs and interest.

COUNT III - BREACH OF CONTRACT

State Farm Insurance Company as subrogee of Thomas and Mona Rauch v. Richard Bloom

19. Plaintiff incorporates by reference Paragraphs 1 through 18 as if set forth in full herein.

20. The negligent and careless conduct of Bloom was the direct and proximate cause of the aforementioned damages suffered by the Rauches and this conduct is more particularly set forth below:

a. In failing to properly install the hot water boiler;

b. In failing to test the hot water boiler after it was installed;

c. In failing to electrically interlock the auxiliary exhaust draft fan pressure switch with the burner controls;

d. In failing to set up the burner with adequate combustion air for a smoke index of zero and 0.02" W.C. overfire draft;

e. In failing to set burner electrodes, set the fuel pressure, set the air fuel mixture by CO, CO_2 or O_2 in the flue gases, and tighten down the air shutter set screws;

f. In failing to install an in-line supply fuel filter on the inlet to the burner;

g. In failing to install the barometric draft damper at least 18 inches above the boiler outlet;

h. In generally failing to install the hot water boiler in a proper, safe and workman-like manner;

i. In failing to warn the Rauches of the chance that the hot water boiler may discharge soot throughout the home;

j. In otherwise failing to exercise due care under the circumstances described above.

WHEREFORE, plaintiff, State Farm Insurance Company as subrogee of Thomas and Mona Rauch, demands judgment in its favor and against defendant, Richard Bloom, in the amount of $23,198.21, exclusive of costs and interest.

Respectfully submitted,

WEBER GALLAGHER SIMPSON STAPLETON
FIRES & NEWBY LLP

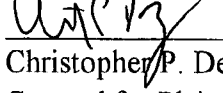

Christopher P. Deegan, Esquire
Counsel for Plaintiff

VERIFICATION

I, Margot Subokow, as a representative of State Farm, verify that the statements made in the Complaint are true and correct to the best of my knowledge. I understand that false statements herein are made subject to the penalties of 18 Pa.C.S.A. Section 4904 relating to unsworn falsification to authorities.

Margot Subokow for State Farm

Margot Subokow

Dated: 11/4/03

IN THE COURT OF COMMON PLEAS OF CLEARFIELD COUNTY , PENNSYLVANIA

SATE FARM INSURANCE
COMPANY as subrogee of
thomas and noma kauch,

PLAINTIFF,

CIVIL DIVISION

NO. 03-1809-CD

-Answer to Complaint

Filed on behalf of
Defendants:
Frank L. Godissart and
Richard Bloom
642 Knepp Road
Clearfield, Pa. 16830

FRANK L. GODISSART AND
RICHARD BLOOM,

DEFENDANTS.

FILED

JAN 27 2004

William A. Shaw
Prothonotary/Clerk of Courts

(1) Frank L. Godissart Contracting went out of business on March First 2000.
(2) Frank contracted Charles Heating Center to install the new boiler and at A meeting with Thomas Rauch Charles Heating informed that he would not install A Power vent for A flue system as it in time soot up He wanted to install A Insulated Flue up the inside corner, Mr. Rauch said no.
(3) Thomas Rauch the next day came to the job site and informed me that he had contracted Richard Bloom to install the heating system.
(4) The heating was installed on 12-1-99 Mr. Bloom And his helper started up The boiler at that time Frank Godissart, Nancy Tillman, Denny Golding and Harvey Shaffner was present when Mr. Bloom tested the boiler and power vent. Mr. Bloom disable the power vent and the boiler shout down. And he retested it three more times. The system at that time had A new 275 gal. Fuel tank and in line fuel filter.
(5) From 12-1-99 to 1-23-02 the boiler had to my understanding NO SERVICE done to it substandard fuel put in the tank. Mr. Bloom Was called two years latter to look at the heating system at that time he discovered that the boiler and the fuel filter was plug with dirt a new tank in two years does not plug up with dirt in to years.
(6) Mr. Bloom informed me on 1-24-04 that he called a factory Representative Mr. Cockrun to look at the boiler and at that time he rewired the power vent this is two years latter.
(7) FRANK GODISSART AT NO TIME WAS CONTACKED ABOUT A PROBLEM WITH THE HEATING SYSTEM FROM THE RAUCHS. I was contacted on April 3, 2003 From State Farm and informed in a letter that I was being sued At no time State Farm Ins. Investigated the clam with me, they instead filed A LAW SUET again me.
(8) It's to my understanding that at no time from the time the boiler was installed until 1-23-02 the boiler had NO SERVICE DONE TO IT, if it did who done the service, if there was a problem with the system who every done the service should have at that time detected a problem with it. Mr. Bloom was been installing heating system for over 30 years with no problems I had myself and (4) other people Present when Mr. Bloom started up the boiler and set the settings and ran it throw varies test the boiler worked fine. The Rauch never had service done until it broke down Two years latter. The suppler of the fuel or the service person should be respectable for the brake down of the boiler and not myself or Mr. Bloom.

Frank L. Godissart

Frank L Godissart

1-27-04

IN THE COURT OF COMMON PLEAS OF CLEARFIELD COUNTY, PENNSYLVANIA

STATE FARM INSURANCE COMPANY as subrogee of Thomas and Mona Rauch,

Plaintiff,

v.

FRANK GODISSART and RICHARD BLOOM,

Defendants.

CIVIL DIVISION - ARBITRATION

No. 03-1809-CD

AMENDED COMPLAINT

Filed on behalf of Plaintiff

Counsel of Record for this Party:

Christopher P. Deegan, Esquire
PA I.D. #85635

WEBER GALLAGHER SIMPSON STAPLETON FIRES & NEWBY, LLP
Firm #594

Two Gateway Center
14th Floor
Pittsburgh, PA 15222

(412) 281-4541

JURY TRIAL DEMANDED

NOTICE TO DEFEND

TO: Frank Godissart
RR 2
Clearfield, PA 16830

Richard Bloom
P.O. Box 13
Olanta, PA 16863

YOU HAVE BEEN SUED IN COURT. IF YOU WISH TO DEFEND AGAINST THE CLAIMS SET FORTH IN THE FOLLOWING PAGES, YOU MUST TAKE ACTION WITHIN TWENTY (20) DAYS AFTER THIS COMPLAINT AND NOTICE ARE SERVED, BY ENTERING A WRITTEN APPEARANCE PERSONALLY OR BY AN ATTORNEY AND FILING IN WRITING WITH THE COURT YOUR DEFENSES OR OBJECTIONS TO THE CLAIMS SET FORTH AGAINST YOU. YOU ARE WARNED THAT IF YOU FAIL TO DO SO THE CASE MAY PROCEED WITHOUT YOU AND A JUDGMENT MAY BE ENTERED AGAINST YOU BY THE COURT WITHOUT FURTHER NOTICE FOR ANY MONEY CLAIMED IN THE COMPLAINT OR FOR ANY OTHER CLAIM OR RELIEF REQUESTED BY THE PLAINTIFF. YOU MAY LOSE MONEY OR PROPERTY OR OTHER RIGHTS IMPORTANT TO YOU.

YOU SHOULD TAKE THIS PAPER TO YOUR LAWYER AT ONCE. IF YOU DO NOT HAVE A LAWYER OR CANNOT AFFORD ONE, GO TO OR TELEPHONE THE OFFICE SET FORTH BELOW TO FIND OUT WHERE YOU CAN GET LEGAL HELP:

Lawyer Referral Service
Allegheny County Bar Association
414 Grant Street, Ninth Floor, Room 920
Pittsburgh, PA 15219
(412) 261-0518

IN THE COURT OF COMMON PLEAS OF CLEARFIELD COUNTY, PENNSYLVANIA

STATE FARM INSURANCE COMPANY as subrogee of Thomas and Mona Rauch,	CIVIL DIVISION - ARBITRATION
	No. 03-1809-CD

Plaintiff,

v.

FRANK GODISSART and
RICHARD BLOOM,

Defendants.

AMENDED COMPLAINT

AND NOW comes plaintiff, State Farm Insurance Company as subrogee of Thomas and Mona Rauch, by and through its attorney, Christopher P. Deegan, Esquire and Weber Gallagher Simpson Stapleton Fires & Newby LLP, and files the following Amended Complaint:

1. Plaintiff, State Farm Insurance Company as subrogee of Thomas and Mona Rauch (hereinafter referred to as "State Farm"), is a corporation doing business in the Commonwealth of Pennsylvania at P.O. Box 1015, Concordville, Pennsylvania 19331.

2. Thomas and Mona Rauch (hereinafter referred to as "the Rauches"), are individuals residing at P.O. Box 443, Deacon Road, Clearfield, Clearfield County, Pennsylvania 16830.

3. The Rauches are the holders of a homeowner's policy of insurance which was issued by State Farm and, at all times relevant hereto, this policy was in effect and covered the property owned by the Rauches at P.O. Box 443 Deacon Road, Clearfield, Clearfield County, Pennsylvania 16830.

4. Defendant, Frank Godissart (hereinafter referred to as "Godissart"), is an individual residing at R.R. 2, Clearfield, Clearfield County, Pennsylvania 16830.

5. At all times relevant hereto, Godissart was the general contractor for the construction of the Rauches' home.

6. Defendant, Richard Bloom (hereinafter referred to as "Bloom"), is an individual residing at 9190 Curwensville Tyrone, Olanta, Clearfield County, Pennsylvania 16863.

7. At all times relevant hereto, the Rauches contracted with Godissart regarding the construction of a new home.

8. As part of their construction of the home, certain appliances were to be installed by Godissart including, but not limited to, a Slant Fin Corporation Liberty II oil-fired hot water boiler.

9. Godissart subcontracted Bloom with regard to the installation of said hot water boiler.

10. Bloom installed the hot water boiler in or about the fall of 1999.

11. On or about January 23, 2002, black soot discharged from the hot water boiler throughout the Rauches' home, causing severe soot damage to the home and its contents.

12. Furthermore, as a result of the soot damage, the Rauches were forced to find alternative living arrangements for a period of time following the incident.

COUNT I - NEGLIGENCE

State Farm Insurance Company as subrogee of Thomas and Mona Rauch v. Frank Godissart

13. Plaintiff incorporates by reference Paragraphs 1 through 12 as if set forth in full herein.

14. The negligent and careless conduct of Godissart in his position as the general contractor and builder of the Rauches' home and his agents and/or employees and/or representatives was the direct and proximate cause of the aforementioned damages suffered by the Rauches and this conduct is more particularly set forth below:

a. In failing to properly install the hot water boiler;

b. In failing to test the hot water boiler after it was installed;

c. In failing to electrically interlock the auxiliary exhaust draft fan pressure switch with the burner controls;

d. In failing to set up the burner with adequate combustion air for a smoke index of zero and 0.02" W.C. overfire draft;

e. In failing to set burner electrodes, set the fuel pressure, set the air fuel mixture by CO, CO_2 or O_2 in the flue gases, and tighten down the air shutter set screws;

f. In failing to install an in-line supply fuel filter on the inlet to the burner;

g. In failing to install the barometric draft damper at least 18 inches above the boiler outlet;

h. In negligently supervising his agents and/or employees and/or representatives who acted or omitted to act as described above;

i. In negligently training those agents and/or employees and/or representatives who acted or omitted to act as described above;

j. In generally failing to install the hot water boiler in a proper, safe and workman-like manner;

k. In failing to warn the Rauches of the chance that the hot water boiler may discharge soot throughout the home;

l. In negligently hiring and contracting with a negligent and careless hot water boiler installer;

m. In otherwise failing to exercise due care under the circumstances described above.

WHEREFORE, plaintiff, State Farm Insurance Company as subrogee of Thomas and Mona Rauch, demands judgment in its favor and against defendant, Frank Godissart, in the amount of

$20,000.00, exclusive of costs and interest.

COUNT I I - BREACH OF CONTRACT

State Farm Insurance Company as subrogee of Thomas and Mona Rauch v. Frank Godissart

15. Plaintiff incorporates by reference Paragraphs 1 through 14 as if set forth in full herein.

16. Godissart did breach his contract with the Rauches in general and in the following particulars:

a. In failing to properly install the hot water boiler;

b. In failing to test the hot water boiler after it was installed;

c. In failing to electrically interlock the auxiliary exhaust draft fan pressure switch with the burner controls;

d. In failing to set up the burner with adequate combustion air for a smoke index of zero and 0.02" W.C. overfire draft;

e. In failing to set burner electrodes, set the fuel pressure, set the air fuel mixture by CO, CO_2 or O_2 in the flue gases, and tighten down the air shutter set screws;

f. In failing to install an in-line supply fuel filter on the inlet to the burner;

g. In failing to install the barometric draft damper at least 18 inches above the boiler outlet;

h. In negligently supervising his agents and/or employees and/or representatives who acted or omitted to act as described above;

i. In negligently training those agents and/or employees and/or representatives who acted or omitted to act as described above;

j. In generally failing to install the hot water boiler in a proper, safe and workman-like manner;

k. In failing to warn the Rauches of the chance that the hot water boiler may discharge soot throughout the home;

l. In negligently hiring and contracting with a negligent and careless hot water boiler installer;

m. In otherwise failing to exercise due care under the circumstances described above.

WHEREFORE, plaintiff, State Farm Insurance Company as subrogee of Thomas and Mona Rauch, demands judgment in its favor and against defendant, Frank Godissart, in the amount of $20,000.00, exclusive of costs and interest.

COUNT III - NEGLIGENCE

State Farm Insurance Company as subrogee of Thomas and Mona Rauch v. Richard Bloom

17. Plaintiff incorporates by reference Paragraphs 1 through 16 as if set forth in full herein.

18. The negligent and careless conduct of Bloom was the direct and proximate cause of the aforementioned damages suffered by the Rauches and this conduct is more particularly set forth below:

a. In failing to properly install the hot water boiler;

b. In failing to test the hot water boiler after it was installed;

c. In failing to electrically interlock the auxiliary exhaust draft fan pressure switch with the burner controls;

d. In failing to set up the burner with adequate combustion air for a smoke index of zero and 0.02" W.C. overfire draft;

e. In failing to set burner electrodes, set the fuel pressure, set the air fuel mixture by CO, CO_2 or O_2 in the flue gases, and tighten down the air shutter set screws;

f. In failing to install an in-line supply fuel filter on the inlet to the burner;

g. In failing to install the barometric draft damper at least 18 inches above the boiler outlet;

h. In generally failing to install the hot water boiler in a proper, safe and workman-like manner;

i. In failing to warn the Rauches of the chance that the hot water boiler may discharge soot throughout the home;

j. In otherwise failing to exercise due care under the circumstances described above.

WHEREFORE, plaintiff, State Farm Insurance Company as subrogee of Thomas and Mona Rauch, demands judgment in its favor and against defendant, Richard Bloom, in the amount of $20,000.00, exclusive of costs and interest.

COUNT IV - BREACH OF CONTRACT

State Farm Insurance Company as subrogee of Thomas and Mona Rauch v. Richard Bloom

19. Plaintiff incorporates by reference Paragraphs 1 through 18 as if set forth in full herein.

20. The negligent and careless conduct of Bloom was the direct and proximate cause of the aforementioned damages suffered by the Rauches and this conduct is more particularly set forth below:

a. In failing to properly install the hot water boiler;

b. In failing to test the hot water boiler after it was installed;

c. In failing to electrically interlock the auxiliary exhaust draft fan pressure switch with the burner controls;

d. In failing to set up the burner with adequate combustion air for a smoke index of zero and 0.02" W.C. overfire draft;

e. In failing to set burner electrodes, set the fuel pressure, set the air fuel mixture by CO, CO_2 or O_2 in the flue gases, and tighten down the air shutter set screws;

f. In failing to install an in-line supply fuel filter on the inlet to the burner;

g. In failing to install the barometric draft damper at least 18 inches above the boiler outlet;

h. In generally failing to install the hot water boiler in a proper, safe and workman-like manner;

i. In failing to warn the Rauches of the chance that the hot water boiler may discharge soot throughout the home;

j. In otherwise failing to exercise due care under the circumstances described above.

WHEREFORE, plaintiff, State Farm Insurance Company as subrogee of Thomas and Mona Rauch, demands judgment in its favor and against defendant, Richard Bloom, in the amount of $20,000.00, exclusive of costs and interest.

Respectfully submitted,

WEBER GALLAGHER SIMPSON STAPLETON
FIRES & NEWBY LLP

Christopher P. Deegan, Esquire
Counsel for Plaintiff

VERIFIED STATEMENT

I, Christopher P. Deegan, Esquire, being the attorney for State Farm Insurance Company as subrogee of Thomas and Mona Rauch, in the within action, am duly authorized to make this Verified Statement on their behalf, and make this Verified Statement due to the fact that plaintiff's Verified Statements cannot be obtained within the time limits necessary for filing this pleading, and I hereby verify that the statements set forth in the foregoing Amended Complaint are true and correct to the best of my information and belief based upon knowledge obtained from plaintiff.

I understand that false statements made herein are subject to the penalties of 18 Pa.C.S. § 4904, relating to unsworn falsifications to authorities.

Dated: 9/14/04

Christopher P. Deegan, Esquire
Counsel for Plaintiff

CERTIFICATE OF SERVICE

I, Christopher P. Deegan, Esquire, hereby certify that a true and correct copy of the foregoing AMENDED COMPLAINT was served upon the following by CERTIFIED MAIL this 14 day of September, 2004:

Frank Godissart
RR 2
Clearfield, PA 16830

Richard Bloom
P.O. Box 13
Olanta, PA 16863

Christopher P. Deegan, Esquire
Counsel for Plaintiff

IN THE COURT OF COMMON PLEAS OF CLEARFIELD COUNTY , PENNSYLVANIA

SATE FARM INSURANCE
COMPANY as subrogee of
thomas and noma Rauch,

PLAINTIFF,

CIVIL DIVISION

NO. 03-1809-CD

-Answer to Complaint

Filed on behalf of
Defendants:
Frank L. Godissart and
Richard Bloom
642 Knepp Road
Clearfield, Pa. 16830

FRANK L. GODISSART AND
RICHARD BLOOM,

DEFENDANTS.

(1) Frank L. Godissart Contracting went out of business on March First 2000.
(2) Frank contracted Charles Heating Center to install the new boiler and at A meeting with Thomas Rauch Charles Heating informed that he would not install A Power vent for A flue system as it in time soot up He wanted to install A Insulated Flue up the inside corner, Mr. Rauch said no.
(3) Thomas Rauch the next day came to the job site and informed me that he had contracted Richard Bloom to install the heating system.
(4) The heating was installed on 12-1-99 Mr. Bloom And his helper started up The boiler at that time Frank Godissart, Nancy Tillman, Denny Golding and Harvey Shaffner was present when Mr. Bloom tested the boiler and power vent. Mr. Bloom disable the power vent and the boiler shout down. And he retested it three more times. The system at that time had A new 275 gal. Fuel tank and in line fuel filter.
(5) From 12-1-99 to 1-23-02 the boiler had to my understanding NO SERVICE done to it substandard fuel put in the tank. Mr. Bloom Was called two years latter to look at the heating system at that time he discovered that the boiler and the fuel filter was plug with dirt a new tank in two years does not plug up with dirt in to years.
(6) Mr. Bloom informed me on 1-24-04 that he called a factory Representative Mr. Cockrun to look at the boiler and at that time he rewired the power vent this is two years latter.
(7) FRANK GODISSART AT NO TIME WAS CONTACKED ABOUT A PROBLEM WITH THE HEATING SYSTEM FROM THE RAUCHS. I was contacted on April 3, 2003 From State Farm and informed in a letter that I was being sued At no time State Farm Ins. Investigated the clam with me, they instead filed A LAW SUET again me.
(8) It's to my understanding that at no time from the time the boiler was installed until 1-23-02 the boiler had NO SERVICE DONE TO IT, if it did who done the service, if there was a problem with the system who every done the service should have at that time detected a problem with it. Mr. Bloom was been installing heating system for over 30 years with no problems I had myself and (4) other people Present when Mr. Bloom started up the boiler and set the settings and ran it throw varies test the boiler worked fine. The Rauch never had service done until it broke down Two years latter. The suppler of the fuel or the service person should be respectable for the brake down of the boiler and not myself or Mr. Bloom.

Frank L. Godissart

Frank L. Godissart

10-6-04

IN THE COURT OF COMMON PLEAS OF CLEARFIELD COUNTY , PENNSYLVANIA

SATE FARM INSURANCE
COMPANY as subrogee of
thomas and noma Rauch,

PLAINTIFF,

CIVIL DIVISION

NO. 03-1809-CD

-Answer to Complaint

Filed on behalf of
Defendants:
Frank L. Godissart an
Richard Bloom
642 Knepp Road
Clearfield, Pa. 16830

FRANK L. GODISSART AND
RICHARD BLOOM,

DEFENDANTS.

019:30 BCK 1cc Def. Bloom
OCT 28 2004

(1) Frank L. Godissart Contracting went out of business on March First 2000.
(2) Frank contracted Charles Heating Center to install the new boiler and at A meeting with Thomas Rauch Charles Heating informed that he would not install A Power vent for A flue system as it in time soot up He wanted to install A Insulated Flue up the inside corner, Mr. Rauch said no.
(3) Thomas Rauch the next day came to the job site and informed me that he had contracted Richard Bloom to install the heating system.
(4) The heating was installed on 12-1-99 Mr. Bloom And his helper started up The boiler at that time Frank Godissart, Nancy Tillman, Denny Golding and Harvey Shaffner was present when Mr. Bloom tested the boiler and power vent. Mr. Bloom disable the power vent and the boiler shout down. And he retested it three more times. The system at that time had A new 275 gal. Fuel tank and in line fuel filter.
(5) From 12-1-99 to 1-23-02 the boiler had to my understanding NO SERVICE done to it substandard fuel put in the tank. Mr. Bloom Was called two years latter to look at the heating system at that time he discovered that the boiler and the fuel filter was plug with dirt a new tank in two years does not plug up with dirt in to years.
(6) Mr. Bloom informed me on 1-24-04 that he called a factory Representative Mr. Cockrum to look at the boiler and at that time he rewired the power vent this is two years latter.
(7) FRANK GODISSART AT NO TIME WAS CONTACKED ABOUT A PROBLEM WITH THE HEATING SYSTEM FROM THE RAUCHS. I was contacted on April 3, 2003 From State Farm and informed in a letter that I was being sued At no time State Farm Ins. Investigated the clam with me, they instead filed A LAW SUET again me.
(8) It's to my understanding that at no time from the time the boiler was installed until 1-23-02 the boiler had NO SERVICE DONE TO IT, if it did who done the service, if there was a problem with the system who every done the service should have at that time detected a problem with it. Mr. Bloom was been installing heating system for over 30 years with no problems I had myself and (4) other people Present when Mr. Bloom started up the boiler and set the settings and ran it throw varies test the boiler worked fine. The Rauch never had service done until it broke down Two years latter. The supplier of the fuel or the service person should be respectable for the brake down of the boiler and not myself or Mr. Bloom.

Richard E. Bloom

State farm ins
100 Old Pond Road
Po Box 100
Budqeville Pa
15017-0100

12-6-02

Richard Bloom
PO Box 13
Clanton PA
16863

Dear Kathy Martz:

In regards to the Thomas & Mona Rauch case Claim# 38-P546670 I'm sending you a copy of the documents from the manufacturer that state the air shutter settings should be set at 6" and be closed. It states in the manual that this boiler needs to be mantained once a year, may opinion they did not maintain it correctly.

In regards to the set screws being loose, I in my 30 years of experience I feel very strongly that they were tight so if you read the warnings in the manual it states not to tamper with anything

As far as the single line I suggested double line because of the dirt picked up by the fuel tank, there was a #30 installed on a single line from tank to burner. If when you inspected the boiler there wasn't one someone tampered with it. When I was at the Rauch residence with the state fire rep, I suggested to Mr Cockrell & Tom Rauch that because we were pick up so much dirt, I suggested we come off the top of the tank with a two line system, Mr Cockrell agreed. At no cost to Tom Rauch.

I was called approx 2 years after installation to come to the residence because of no heat, what I found was burner was not getting any fuel, ~~approx~~ ~~inspection I found~~ no fuel, I changed nozzle, oil filter, I removed canister

so what the Rauch's wanted me to do. Upon his inspection he found the ~~boiler~~ furnace needed cleaned, a nozzle & a oil filter. That's when the suggestion came about two lines instead of one he found there was dirt in the nozzle and oil filter. Mr Cochran agreed the furnace needed service once a year, I feel there was neglect for 2 years. That boiler ran for ~~for~~ two years with no problem, I feel I know my job & that boiler was installed correctly.

Thank you
Richard E Chron

IN THE COURT OF COMMON PLEAS OF CLEARFIELD COUNTY, PENNSYLVANIA

STATE FARM INSURANCE COMPANY,
as Subrogee of Thomas and Mona Rauch,

Plaintiff,

vs.

FRANK GODISSART and RICHARD BLOOM,

Defendants.

CIVIL DIVISION – ARBITRATION

NO.: 03-1809-CD

CERTIFICATE OF READINESS FOR ARBITRATION

Filed on Behalf of Plaintiff

Counsel of Record For This Party:

Christopher P. Deegan, Esquire
PA I.D. #85635

Renee M. Porada, Esquire
PA I.D. #89604

WEBER GALLAGHER SIMPSON
STAPLETON FIRES & NEWBY LLP
Firm #594
Two Gateway Center, Suite 1450
603 Stanwix Street
Pittsburgh, PA 15222
Phone: (412) 281-4541
Fax: (412) 281-4547

IN THE COURT OF COMMON PLEAS OF CLEARFIELD COUNTY, PENNSYLVANIA

STATE FARM INSURANCE COMPANY, as Subrogee of Thomas and Mona Rauch,	)	CIVIL DIVISION – ARBITRATION
	)	NO.: 03-1809-CD
Plaintiff,	)	
vs.	)	
FRANK GODISSART and RICHARD BLOOM,	)	
Defendants.	)	

CERTIFICATE OF READINESS FOR ARBITRATION

TO: WILLIAM SHAW, PROTHONOTARY:

Please place the above captioned matter on the next available arbitration list.

Counsel for Plaintiff:
Renee M. Porada, Esquire — Weber Gallagher Simpson Stapleton Fires & Newby LLP
Two Gateway Center, Suite 1450
603 Stanwix Street
Pittsburgh, PA 15222

Defendant:
Frank Godissart — RR 2
Clearfield, PA 16830

Defendant:
Richard Bloom — PO Box 13
Olanta, PA 16863

Estimated Hearing Time: 1 Hour

I, Renee M. Porada, Esquire, Attorney for Plaintiff, hereby certify that the amount in controversy is $20,000.00 thereby placing this matter within the jurisdictional limits for compulsory arbitration. I further certify that there are no outstanding motions or discovery requests and that settlement negotiations have failed.

11/3/04
DATE

Renee M. Porada
Renee M. Porada, Esquire
Counsel for Plaintiff

CERTIFICATE OF SERVICE

I hereby certify that a true and correct copy of the foregoing CERTIFICATE OF READINESS FOR ARBITRATION has been served by first class U.S. mail, postage prepaid, this 3rd day of November, 2004, upon the following parties:

Frank Godissart
RR 2
Clearfield, PA 16830

Richard Bloom
P.O. Box 13
Olanta, PA 16863

Renee M. Porada

Renee M. Porada, Esquire

CA

IN THE COURT OF COMMON PLEAS OF CLEARFIELD COUNTY, PENNSYLVANIA
CIVIL DIVISION

STATE FARM INSURANCE COMPANY	:	
	:	
vs.	:	No. 03-1809-CD
	:	
FRANK GODISSART and	:	
RICHARD BLOOM	:	

ORDER

NOW, this 1st day of March, 2005, it is the ORDER of the Court that the above-captioned matter is scheduled for Arbitration on **Tuesday, April 26, 2005 at 1:00 P.M.** The following have been appointed as Arbitrators:

Richard A. Bell, Esquire, Chairman

John R. Ryan, Esquire

Gary A. Knaresboro, Esquire

Pursuant to Local Rule 1306A, you must submit your Pre-Trial Statement seven (7) days prior to the scheduled Arbitration. **The original should be forwarded to the Court Administrator's Office and copies to opposing counsel and each member of the Board of Arbitrators.** For your convenience, a Pre-Trial (Arbitration) Memorandum Instruction Form in enclosed as well as a copy of said Local Rule of Court.

Please report to Hearing Room No. 3, 2nd Floor, Clearfield County Courthouse, Clearfield, PA.

BY THE COURT:

FREDRIC J. AMMERMAN
President Judge

FILED

MAR 01 2005
0/2:15/w
William A. Shaw
Prothonotary/Clerk of Courts
5 cert to C/A for Ser

SENDER: COMPLETE THIS SECTION

- Complete items 1, 2, and 3. Also complete item 4 if Restricted Delivery is desired.
- Print your name and address on the reverse so that we can return the card to you.
- Attach this card to the back of the mailpiece, or on the front if space permits.

1. Article Addressed to:

Frank Godissart
R.R. #2
Clearfield, PA 16830

FILED
03:33 PM
MAR 08 2005
William A. Shaw
Prothonotary/Clerk of Courts

#03-1809-CD

COMPLETE THIS SECTION ON DELIVERY

A. Signature
X Frank Godissart ☒ Agent ☐ Addressee

B. Received by (Printed Name) Frank Godissart C. Date of Delivery

D. Is delivery address different from item 1? ☐ Yes
If YES, enter delivery address below: ☐ No

3. Service Type
☒ Certified Mail ☐ Express Mail
☐ Registered ☐ Return Receipt for Merchandise
☐ Insured Mail ☐ C.O.D.

4. Restricted Delivery? (Extra Fee) ☐ Yes

2. Article Number
(Transfer from service label) 7004 0550 0000 7176 3441

PS Form 3811, August 2001 Domestic Return Receipt 102595-02-M-1540

UNITED STATES POSTAL SERVICE

PM

7 MAR

FREE SERVICE FROM
First-Class Mail
Postage & Fees Paid
USPS
Permit No. G-10

• Sender: Please print your name, address, and ZIP+4 in this box •

Office of Court Administrator
Clearfield County Courthouse
230 East Market Street,
Suite 228
Clearfield, PA 16830

mk/Arb

6830=2448

IN THE COURT OF COMMON PLEAS OF CLEARFIELD COUNTY, PENNSYLVANIA
CIVIL DIVISION

STATE FARM INSURANCE COMPANY	:	
	:	
vs.	:	No. 03-1809-CD
	:	
FRANK GODISSART and RICHARD BLOOM	:	

ORDER

NOW, this 15t day of March, 2005, it is the ORDER of the Court that the above-captioned matter is scheduled for Arbitration on **Tuesday, April 26, 2005 at 1:00 P.M.** The following have been appointed as Arbitrators:

Richard A. Bell, Esquire, Chairman

John R. Ryan, Esquire

Gary A. Knaresboro, Esquire

Pursuant to Local Rule 1306A, you must submit your Pre-Trial Statement seven (7) days prior to the scheduled Arbitration. **The original should be forwarded to the Court Administrator's Office and copies to opposing counsel and each member of the Board of Arbitrators.** For your convenience, a Pre-Trial (Arbitration) Memorandum Instruction Form in enclosed as well as a copy of said Local Rule of Court.

Please report to Hearing Room No. 3, 2nd Floor, Clearfield County Courthouse, Clearfield, PA.

BY THE COURT:

/s/

FREDRIC J. AMMERMAN
President Judge

SENDER: COMPLETE THIS SECTION

- Complete items 1, 2, and 3. Also complete item 4 if Restricted Delivery is desired.
- Print your name and address on the reverse so that we can return the card to you.
- Attach this card to the back of the mailpiece, or on the front if space permits.

1. Article Addressed to:

Richard Bloom
9190 Curwensville/Tyrone Pike
Olanta, PA 16863

FILED
01:00 PM
MAR 08 2005
William A. Shaw
Prothonotary/Clerk of Courts

#03-1809-CD

COMPLETE THIS SECTION ON DELIVERY

A. Signature
X Richard Bloom
☐ Agent
☐ Addressee

B. Received by (Printed Name): Richard Bloom
C. Date of Delivery: 3-3-05

D. Is delivery address different from item 1? ☐ Yes
If YES, enter delivery address below: ☐ No

3. Service Type
☒ Certified Mail ☐ Express Mail
☐ Registered ☐ Return Receipt for Merchandise
☐ Insured Mail ☐ C.O.D.

4. Restricted Delivery? (Extra Fee) ☐ Yes

2. Article Number (Transfer from service label) 7004 0550 0000 7176 3458

PS Form 3811, August 2001 Domestic Return Receipt 102595-02-M-1540

UNITED STATES POSTAL SERVICE

First-Class Mail
Postage & Fees Paid
USPS
Permit No. G-10

• Sender: Please print your name, address, and ZIP+4 in this box •

Office of Court Administrator
Clearfield County Courthouse
230 East Market Street, Suite 228
Clearfield, PA 16830

MK/Drb

04

IN THE COURT OF COMMON PLEAS OF CLEARFIELD COUNTY, PENNSYLVANIA
CIVIL DIVISION

STATE FARM INSURANCE COMPANY	:	
	:	
vs.	:	No. 03-1809-CD
	:	
FRANK GODISSART and RICHARD BLOOM	:	

ORDER

NOW, this 1st day of March, 2005, it is the ORDER of the Court that the above-captioned matter is scheduled for Arbitration on **Tuesday, April 26, 2005 at 1:00 P.M.** The following have been appointed as Arbitrators:

Richard A. Bell, Esquire, Chairman

John R. Ryan, Esquire

Gary A. Knaresboro, Esquire

Pursuant to Local Rule 1306A, you must submit your Pre-Trial Statement seven (7) days prior to the scheduled Arbitration. **The original should be forwarded to the Court Administrator's Office and copies to opposing counsel and each member of the Board of Arbitrators.** For your convenience, a Pre-Trial (Arbitration) Memorandum Instruction Form in enclosed as well as a copy of said Local Rule of Court.

Please report to Hearing Room No. 3, 2nd Floor, Clearfield County Courthouse, Clearfield, PA.

BY THE COURT:

/s/

FREDRIC J. AMMERMAN
President Judge

GA

IN THE COURT OF COMMON PLEAS OF CLEARFIELD COUNTY, PENNSYLVANIA

STATE FARM INSURANCE COMPANY as subrogee of Thomas and Mona Rauch,

Plaintiff,

v.

FRANK GODISSART and RICHARD BLOOM,

Defendants.

CIVIL DIVISION - ARBITRATION

No. 03-1809-CD

MOTION FOR CONTINUANCE

Filed on behalf of Plaintiff

Counsel of Record for this Party:

Christopher P. Deegan, Esquire
PA I.D. #85635

WEBER GALLAGHER SIMPSON STAPLETON FIRES & NEWBY, LLP
Firm #594

Two Gateway Center
14th Floor
Pittsburgh, PA 15222

(412) 281-4541

IN THE COURT OF COMMON PLEAS OF CLEARFIELD COUNTY, PENNSYLVANIA

STATE FARM INSURANCE COMPANY as subrogee of Thomas and Mona Rauch,

Plaintiff,

v.

FRANK GODISSART and RICHARD BLOOM,

Defendants.

CIVIL DIVISION - ARBITRATION

No. 03-1809-CD

MOTION FOR CONTINUANCE

AND NOW comes plaintiff, State Farm Insurance Company as subrogee of Thomas and Mona Rauch, by and through its counsel, Christopher P. Deegan, Esquire and Weber Gallagher Simpson Stapleton Fires & Newby LLP, and files the following Motion for Continuance:

1. The arbitration hearing date is currently scheduled for April 26, 2005 at 1:00 p.m.
2. Counsel for plaintiff has a scheduling conflict for that date.
3. No parties will be prejudiced should the hearing be continued.

WHEREFORE, plaintiff requests that the Court Administrator reschedule this matter on the next available arbitration date.

Respectfully submitted,

WEBER GALLAGHER SIMPSON STAPLETON FIRES & NEWBY LLP

Christopher Deegan Jr.

Christopher P. Deegan, Esquire
Counsel for Plaintiff

IN THE COURT OF COMMON PLEAS OF CLEARFIELD COUNTY, PENNSYLVANIA

STATE FARM INSURANCE COMPANY as subrogee of Thomas and Mona Rauch,

Plaintiff,

v.

FRANK GODISSART and RICHARD BLOOM,

Defendants.

CIVIL DIVISION - ARBITRATION

No. 03-1809-CD

ORDER

AND NOW, this 21st day of April, 2005 it is hereby ORDERED that upon consideration of plaintiff's Motion for Continuance, the Court Administrator is directed to reschedule this matter on the next available arbitration date.

By the Court,

Fredric J. Ammerman, J.

FILED

APR 21 2005 (GK)

01/4:00/c

William A. Shaw

Prothonotary/Clerk of Courts

1 cert to Atty

IN THE COURT OF COMMON PLEAS OF CLEARFIELD COUNTY, PENNSYLVANIA
CIVIL DIVISION

STATE FARM INSURANCE COMPANY	:	
vs.	:	No. 03-1809-CD
FRANK GODISSART and RICHARD BLOOM	:	

JUN 20 2005

Prothonotary/Clerk of Courts

ORDER

NOW, this 20th day of June, 2005, it is the ORDER of the Court that the above-captioned matter is scheduled for Arbitration on **Tuesday, August 16, 2005 at 1:00 P.M.** The following have been appointed as Arbitrators:

Richard A. Bell, Esquire, Chairman

Ronald L. Collins, Esquire

Kimberly M. Kubista, Esquire

Pursuant to Local Rule 1306A, you must submit your Pre-Trial Statement seven (7) days prior to the scheduled Arbitration. **The original should be forwarded to the Court Administrator's Office and copies to opposing counsel and each member of the Board of Arbitrators.** For your convenience, a Pre-Trial (Arbitration) Memorandum Instruction Form in enclosed as well as a copy of said Local Rule of Court.

Please report to Hearing Room No. 3, 2nd Floor, Clearfield County Courthouse, Clearfield, PA.

BY THE COURT:

FREDRIC J. AMMERMAN
President Judge

PLACE STICKER AT TOP OF ENVELOPE TO THE RIGHT OF THE RETURN ADDRESS, OR ON BACK IF SPACE DOES NOT PERMIT.

SENDER: *COMPLETE THIS SECTION*

- Complete items 1, 2, and 3. Also complete item 4 if Restricted Delivery is desired.
- Print your name and address on the reverse so that we can return the card to you.
- Attach this card to the back of the mailpiece, or on the front if space permits.

1. Article Addressed to:

Frank Godissart
R.R. #2
Clearfield, PA 16830

FILED
JUN 28 2005
William A. Shaw
Prothonotary/Clerk of Courts

COMPLETE THIS SECTION ON DELIVERY

A. Signature
X Frank Godissart ☐ Agent ☐ Addressee

B. Received by *(Printed Name)* FRANK GODISSART C. Date of Delivery JUN 21 2005

D. Is delivery address different from item 1? ☐ Yes
If YES, enter delivery address below: ☐ No

3. Service Type
☒ Certified Mail ☐ Express Mail
☐ Registered ☐ Return Receipt for Merchandise
☐ Insured Mail ☐ C.O.D.

4. Restricted Delivery? *(Extra Fee)* ☐ Yes

2. Article Number
(Transfer from service label) 7001 2510 0005 2724 1188

PS Form 3811, August 2001 Domestic Return Receipt 102595-02-M-1540

UNITED STATES POSTAL SERVICE

PM

First-Class Mail
Postage & Fees Paid
USPS
Permit No. G-10

• Sender: Please print your name, address, and ZIP+4 in this box •

Office of Court Administrator
Clearfield County Courthouse
230 East Market Street, Suite 228
Clearfield, PA 16830

16830+2446

SENDER: *COMPLETE THIS SECTION*

- Complete items 1, 2, and 3. Also complete item 4 if Restricted Delivery is desired.
- Print your name and address on the reverse so that we can return the card to you.
- Attach this card to the back of the mailpiece, or on the front if space permits.

1. Article Addressed to:

Richard Bloom
Curwensville/Tyrone Pike
Olanta, PA 16863

COMPLETE THIS SECTION ON DELIVERY

A. Signature
x Bonnie Hoover ☒ Agent ☐ Addressee

B. Received by (*Printed Name*) Bonnie Hoover
C. Date of Delivery 6-27-05

D. Is delivery address different from item 1? ☐ Yes
If YES, enter delivery address below: ☐ No

3. Service Type
☒ Certified Mail ☐ Express Mail
☐ Registered ☐ Return Receipt for Merchandise
☐ Insured Mail ☐ C.O.D.

4. Restricted Delivery? (*Extra Fee*) ☐ Yes

2. Article Number
(*Transfer from service label*) 7001 2510 0005 2724 1171

PS Form 3811, August 2001 Domestic Return Receipt 102595-02-M-1540

UNITED STATES POSTAL SERVICE

ALTOONA, PA 168
PM
27 JUN

First-Class Mail
Postage & Fees Paid
USPS
Permit No. G-10

• Sender: Please print your name, address, and ZIP+4 in this box •

Office of Court Administrator
Clearfield County Courthouse
230 East Market Street, Suite 228
Clearfield, PA 16830

hic/Ark

16830+2448

IN THE COURT OF COMMON PLEAS OF CLEARFIELD COUNTY, PENNSYLVANIA
CIVIL DIVISION

STATE FARM INSURANCE COMPANY	:	
	:	
vs.	:	No. 03-1809-CD
	:	
FRANK GODISSART and	:	
RICHARD BLOOM	:	

ORDER

NOW, this 20th day of June, 2005, it is the ORDER of the Court that the above-captioned matter is scheduled for Arbitration on **Tuesday, August 16, 2005 at 1:00 P.M.** The following have been appointed as Arbitrators:

Richard A. Bell, Esquire, Chairman

Ronald L. Collins, Esquire

Kimberly M. Kubista, Esquire

Pursuant to Local Rule 1306A, you must submit your Pre-Trial Statement seven (7) days prior to the scheduled Arbitration. **The original should be forwarded to the Court Administrator's Office and copies to opposing counsel and each member of the Board of Arbitrators.** For your convenience, a Pre-Trial (Arbitration) Memorandum Instruction Form in enclosed as well as a copy of said Local Rule of Court.

Please report to Hearing Room No. 3, 2nd Floor, Clearfield County Courthouse, Clearfield, PA.

Cert. copy of this order sent cert. mail to each Def.

M Kelley

BY THE COURT:

FREDRIC J. AMMERMAN
President Judge

IN THE COURT OF COMMON PLEAS OF CLEARFIELD COUNTY, PENNSYLVANIA

STATE FARM INSURANCE COMPANY, as subrogee of Thomas and Mona Rauch,

Plaintiff,

vs.

FRANK GODISSART and RICHARD BLOOM,

Defendant.

NO.: 03-1809-CD

NOTICE OF EVIDENTIARY SUBMISSION PURSUANT TO Pa.R.C.P. 1305

Filed on behalf of Plaintiff:
State Farm Insurance Company as subrogee of Thomas and Mona Rauch

Counsel of Record for This Party:

Renee M. Porada, Esquire
PA I.D. #89604

WEBER GALLAGHER SIMPSON
STAPLETON FIRES & NEWBY LLP
Firm #594
2 Gateway Center
Suite 1450
Pittsburgh, PA 15222
Phone: (412) 281-4541
Fax: (412) 281-4547

IN THE COURT OF COMMON PLEAS OF CLEARFIELD COUNTY, PENNSYLVANIA

STATE FARM INSURANCE COMPANY, as subrogee of Thomas and Mona Rauch, NO.: 03-1809-CD

Plaintiff,

vs.

FRANK GODISSART and RICHARD BLOOM,

Defendant.

NOTICE OF EVIDENTIARY SUBMISSION PURSUANT TO Pa.R.C.P. 1305

Exhibits attached hereto will be presented as evidence at the time of arbitration.

Respectfully submitted,

WEBER GALLAGHER SIMPSON STAPLETON FIRES & NEWBY, LLP

By: Renee M. Porada

Renee M. Porada, Esquire
Attorney for Plaintiff

Date: 7/16/05

CERTIFICATE OF SERVICE

I hereby certify that a true and correct copy of the foregoing Notice of Evidentiary Submission Pursuant to Pa.R.C.P. 1305 has been served by first class U.S. mail, postage prepaid, this 16th day of July, 2005, upon the following parties:

Frank Godissart
RR 2
Clearfield, PA 16830

Richard Bloom
P.O. Box 13
Olanta, PA 16863

Renee M. Porada

Renee M. Porada, Esquire

COLORS GALORE CONTRACTORS
RR 1, BOX 318
CLEARFIELD, PA 16830
(814) 765-6637

March 22, 2002

Mona Rauch

RE: Price quote for vertical blinds.

Hunter Douglas Innerstyle Vertical - Freehang
Vanes Only 3 ½"
Price Chart 11 Fabric

Quantity	Description	Each	Total
30	Vanes @ 82" Net Length	49.00	1,470.00
68	Vanes @ 82" Net Length	49.00	3,332.00
26	Vanes @ 52 ½" Net Length	39.00	1,014.00
1	Valance Insert 110" Net	67.00	67.00
2	Valance Insert 124" Net	71.00	142.00
1	Valance Insert 98" Net	62.00	62.00
			6,087.00
	Discount of 40%		-2,434.80
			3,652.20
	Freight		45.00
			3,697.20
	6% Sales Tax		221.83
			3,919.03
	Installation		250.00
	Total		4,169.03

Rim Field
11-22-02
M.H.

Room: Basement

LxWxH 40'0" x 30'0" x 8'0"

1,120.00	SF Walls	1,200.00	SF Ceiling	2,320.00	SF Walls & Ceiling
1,200.00	SF Floor	133:33	SY Flooring	140.00	LF Floor Perimeter
320.00	SF Long Wall	240.00	SF Short Wall	140.00	LF Ceil. Perimeter

DESCRIPTION	QUANTITY	UNIT COST	RCV	DEPREC.	ACV
Clean concrete on part of the floor	900.00 SF	0.13	117.00		117.00
Clean light fixture - fluorescent	2.00 EA	5.94	11.88		11.88
Clean door - French (per side)	1.00 EA	9.33	9.33		9.33
Clean foundation wall	1,072.00 SF	0.23	246.56		246.56
Clean floor or roof joist system	1,200.00 SF	0.41	492.00		492.00
Clean light fixture	1.00 EA	4.48	4.48		4.48
Clean door / window opening (per side)	3.00 EA	5.48	16.44		16.44
Clean window unit (per side) 3 - 9 SF	1.00 EA	4.44	4.44		4.44
Contents - move out then reset - Extra large room large amount of contents to move around in the basement	1.00 EA	104.96	104.96		104.96
Room Totals: Basement			**1,007.09**		**1,007.09**

Room: Personal Property

DESCRIPTION	QUANTITY	UNIT COST	RCV	DEPREC.	ACV
General clean - up Clean contents in the basement	5.00 HR	17.26	86.30		86.30
Laundry For washing laundry as a result of the loss	31.00 EA	5.00 *	155.00		155.00
Room Totals: Personal Property			**241.30**		**241.30**

Line Item Totals: 38-P546-670	**1,248.39**	**1,248.39**

Grand Total Areas:

1,120.00	SF Walls	1,200.00	SF Ceiling	2,320.00	SF Walls & Ceiling
1,200.00	SF Floor	133.33	SY Flooring	140.00	LF Floor Perimeter
320.00	SF Long Wall	240.00	SF Short Wall	140.00	LF Ceil. Perimeter

STRUCTURAL DAMAGE CLAIM POLICY

When you have a covered structural damage claim to your real property, you should know ...

-We want you to receive quality repair work to restore the damages to your property.

-We will provide you with a detailed estimate of the scope of damage and costs of repairs. Should the contractor you select have questions concerning our estimate, they should contact your claim representative directly.

-You may have the repairs made by a contractor of your choice.

-If you select a contractor whose estimate is the same as or lower than our estimate, based on the same scope of damages, we will pay based upon their estimate. If your contractor's estimate is higher than ours, you should contact your claim representative prior to beginning the repairs.

-State Farm cannot authorize any contractor to proceed with work on your property. Repairs should proceed only with your authorization.

-State Farm does not guarantee the quality of workmanship of any contractor or guarantee that the work will be accomplished within any specific time frame.

-It is understood that the contractor is hired by you, our insured, and that they work for you - not State Farm.

03/28/2002 15:37 3262733

DIRECT INQUIRIES TO:

4324

THE SHERWIN-WILLIAMS CO
ACCOUNTS RECEIVABLE DEPARTMENT
980 BEAVER DR
DU BOIS PA 15801-2514

PHONE NO.: 814 371-7780

ACCOUNT NUMBER	JOB	CREDIT LIMIT	STORE NUMBER
8706-2183-8	01	1501	1174

STMT. DATE	TERMS	PAYMENT DUE
02-28-2002	NET 20TH PROX	03-20-2002

217831
8372

SHERWIN Williams

**********AUTO** ALL FOR AADC 150
HERB BULLERS JR CONTRACTING
RR 5 BOX 200A
BROOKVILLE PA 15825-9516

PREVIOUS BALANCE	CURRENT MONTH CHARGES	CURRENT MONTH CREDIT	ACCOUNT BALANCE
	991.10		991.10

DATE	REFERENCE NO.	TRANSACTION TYPE	BILLING STORE	AMOUNT	TOTAL
CURRENT DUE - OPEN ITEMS					
02-18-2002	14988	CHARGE	1174	452.05	
02-25-2002	17891	CHARGE	1174	224.98	
02-27-2002	19252	CHARGE	1174	314.07	
					991.10

CURRENT	1-30	31-60	PAST DUE 61-90	OVER 90	NET AMOUNT DUE
991.10					991.10

▼ DETACH HERE AND RETURN LOWER PORTION WITH YOUR PAYMENT ▼

▼ CHECK ITEMS BEING PAID		▼ CHECK ITEMS BEING PAID		▼ CHECK ITEMS BEING PAID	
REFERENCE NO.	AMOUNT	REFERENCE NO.	AMOUNT	REFERENCE NO.	AMOUNT
14988	452.05				
17891	224.98				
19252	314.07				

IF ADDRESS CHANGE IS REQUIRED CHECK HERE AND NOTE CHANGES IN SPACE PROVIDED ON REVERSE SIDE.

☐

SEND PAYMENTS TO:

THE SHERWIN-WILLIAMS CO
980 BEAVER DR
DU BOIS PA 15801-2514

AMOUNT DUE 991.10

AMOUNT ENCLOSED

HERB BULLERS JR CONTRACTING
670621838 01 00092 1174 02282002 00009911099

CARPET ONE CLEARFIELD

RT 322 EAST, CLEARFIELD, PA 16830

PHONE 814-765-3357

FIRST NAME	LAST NAME	CLASS	SALESPERSON	CONTACT DATE
SPANKY/MONA	RAUCH	*OWES*	ED	2/25/02

ADDRESS	HOME PHONE	ORDER DATE	INST. DATE
PO BOX 443	7653512	2/25/02	3/8/02

		WORK PHONE	INSTALLER
CLEARFIELD	PA		STEVE

FINANCE TYPE	FINANCE TERMS	FINANCE ACCOUNT #	EVERGUARD/LEES	INVOICE
CASH/CHECK	COD			43.00

AREA	STYLE	COLOR	SIZE	MILL & STATUS
LR/BR/STEPS	SUNDOWN	LONDON FOG	12X122	

PD on draft to Sergio

INSTALLATION INSTRUCTIONS

SOOT DAMAGED CARPET AND PAD

WAREHOUSE CUTS

DIRECTIONS

879 N, L AT LIGHT, PAST BI LO, A FRAME ON RT

CARPET UNITS	PAD TYPE A
162.00	BLK DIA

VINYL UNITS	PAD TYPE B

LAMINATE UNITS

HARD UNITS

MATERIAL	$5,196.76
SALES TAX	
SUBTOTAL	**$5,196.76**
LABOR	
TOTAL	5,196.76
DEPOSIT	
BALANCE DUE	**$5,196.76**

THANK YOU! WE APPRECIATE YOUR BUSINESS

3/4/2002 289036

State Farm Insurance Co.
Denise Serbin
2 Sellers Drive
Altoona PA 16601

Thomas Rauch
P.O.Box 443
Clearfield, PA 16830
Claim # 38-P546-670

SERVPRO of Clearfield County
729 South Brady Street, Suite A
DuBois, PA 15801

2/28/2002

Subcontract:Carpet Reinstall/Install	5,196.76
Subcontract:Painting	4,395.77
Insurance:Fire Damage	6,009.33T
PA Sales Tax	360.56

Minus $250.00 deductible

$15,962.42

Phone: 814-371-4317
Tax ID # 25-1859996

Customer Signature

No One Home

White - Original Invoice Yellow - Billing Copy Green - Beginning Copy Pink - Customer Copy 2nd White - Trainer Back Sheet - Recall File

Date: 02/08/2002 12:16:29 PM Page: 1

SERVPRO Servpro of Clearfield County

729 South Brady St.
Dubois, PA 15801
(814) 371-4317
Fax: (814) 371-4324
Tax ID #: 25-1859996
Email: servpro8650@adelphia.net

ESTIMATE

Insured: Rauch Thomas
Adjuster:
Claim #: 38-P546-670
Policy #:
Estimate Type: Smoke

FNOL Date: 01/24/2002
Agent:
Loss Date: 01/23/2002 11:21:17 AM
Price List: SERVPRO of Clearfield County
Estimator:

Room: Job/Struct

Object	Service	Qualifier	Quantity	UOM	Price	Total	Tax	Type
			0.00			$0.00		

Structure Total	$0.00
Contents Total	$0.00
Room Total	$0.00

ROOM NOTES:

Room: F-Kitchen (L=14'7" W=17'6" H=8'0")

cfRoom	2,041.67	syFlooring	28.36	lfCeiling Perimeter	64.17
sfCeiling	255.21	sfWalls	513.33	lfFloor Perimeter	64.17
sfFloor	255.21			sfWalls/Ceiling	768.54

Object	Service	Qualifier	Quantity	UOM	Price	Total	Tax	Type
Microwave	Clean		1.00	EA	$5.00	$5.00	T	C
Oven	Clean		1.00	EA	$10.00	$10.00	T	C
Refrigerator	Clean		1.00	EA	$15.00	$15.00	T	C
Sinks, Double	Clean		1.00	EA	$10.00	$10.00	T	S
Table, Kitchen	Clean		1.00	EA	$8.50	$8.50	T	C
Chair, Upholstered	Clean and Deodorize		8.00	LF	$12.00	$96.00	T	C
Dishwasher	Clean and Polish		1.00	EA	$8.00	$8.00	T	C
Heat, Baseboard Water	Clean		6.50	LF	$1.20	$7.80	T	S

SERVPRO ScanEB™

Insured: Rauch Thomas

Structure Total	$17.80
Contents Total	$142.50
Room Total	$160.30

ROOM NOTES:

Room: F-Bedroom (L=10'0" W=9'4" H=8'0")

cfRoom	746.67	syFlooring	10.37	lfCeiling Perimeter	38.67
sfCeiling	93.33	sfWalls	309.33	lfFloor Perimeter	38.67
sfFloor	93.33			sfWalls/Ceiling	402.67

Object	Service	Qualifier	Quantity	UOM	Price	Total	Tax	Type
Beds	Clean		1.00	EA	$12.50	$12.50	T	C
Book Case	Clean		1.00	EA	$10.00	$10.00	T	C
Dresser	Clean		1.00	EA	$10.00	$10.00	T	C
Television, Portable	Clean		1.00	EA	$5.00	$5.00	T	C
Toys	Clean		1.00	HRS	$25.00	$25.00	T	C
Cabinet, Filing	Clean		1.00	EA	$8.00	$8.00	T	C

Structure Total	$0.00
Contents Total	$70.50
Room Total	$70.50

ROOM NOTES:

Room: F-Bathroom (L=11'5" W=5'0" H=8'0")

cfRoom	456.67	syFlooring	6.34	lfCeiling Perimeter	32.83
sfCeiling	57.08	sfWalls	262.67	lfFloor Perimeter	32.83
sfFloor	57.08			sfWalls/Ceiling	319.75

Object	Service	Qualifier	Quantity	UOM	Price	Total	Tax	Type
Heat, Baseboard Water	Clean		5.00	LF	$1.20	$6.00	T	S
Shelving	Clean		12.00	LF	$0.50	$6.00	T	S

SERVPRO ScanEx™

Insured: Rauch Thomas

Structure Total	$12.00
Contents Total	$0.00
Room Total	$12.00

ROOM NOTES:

Room: F-Livingroom (L=30'0" W=20'0" H=22'0")

cfRoom	13,200.00	syFlooring	66.67	lfCeiling Perimeter	100.00
sfCeiling	600.00	sfWalls	2,200.00	lfFloor Perimeter	100.00
sfFloor	600.00			sfWalls/Ceiling	2,800.00

Object	Service	Qualifier	Quantity	UOM	Price	Total	Tax	Type
Chair, Upholstered	Clean and Deodorize		3.00	LF	$12.00	$36.00	T	C
Sofa	Clean and Deodorize		10.00	LF	$12.00	$120.00	T	C
Table, Coffee	Clean		1.00	EA	$10.00	$10.00	T	C
Television, Console	Clean		1.00	EA	$10.00	$10.00	T	C
Chair, Upholstered	Clean and Deodorize		8.00	LF	$12.00	$96.00	T	C
Entertainment Center	Clean and Polish		1.00	EA	$30.00	$30.00	T	C
Exercise Equipment	Clean		1.00	EA	$15.00	$15.00	T	C
Table, Dining	Clean and Polish		1.00	EA	$10.00	$10.00	T	C
Table, End	Clean		2.00	EA	$5.00	$10.00	T	C
Lamp, Hurricane	Clean		1.00	EA	$13.00	$13.00	T	C
Clocks	Clean		1.00	EA	$6.00	$6.00	T	C
Planter Stands	Clean		1.00	EA	$6.00	$6.00	T	C
Stereo Speakers	Clean		1.00	EA	$15.00	$15.00	T	C
Stereos	Clean		1.00	EA	$15.00	$15.00	T	C
Lamp with Fabric Shade	Clean and Polish		1.00	EA	$15.00	$15.00	T	C
Blinds,Cloth	Clean		120.00	EA	$1.00	$120.00	T	S
Rug, Area	Hot Water Extraction		35.00	SF	$0.25	$8.75	T	C
Contents, Misc.	Clean		1.00	HRS	$25.00	$25.00	T	C

Structure Total	$120.00
Contents Total	$440.75
Room Total	$560.75

ROOM NOTES:

SERVPRO SCRIBER™

Insured: Rauch Thomas

Room: F-Bedroom2 (L=17'10" W=14'8" H=8'0")

cfRoom	2,092.44	syFlooring	29.06	lfCeiling Perimeter	65.00
sfCeiling	261.56	sfWalls	520.00	lfFloor Perimeter	65.00
sfFloor	261.56			sfWalls/Ceiling	781.56

Object	Service	Qualifier	Quantity	UOM	Price	Total	Tax	Type
Dresser	Clean		2.00	EA	$10.00	$20.00	T	C
Bed, Post/Spindle	Clean		1.00	EA	$25.00	$25.00	T	C
Night Stand	Clean		1.00	EA	$5.25	$5.25	T	C
Cabinet, Gun	Clean		1.00	EA	$10.00	$10.00	T	C
Lamp, Crystal	Clean		1.00	EA	$13.00	$13.00	T	C
Television, Portable	Clean		1.00	EA	$5.00	$5.00	T	C
Heat, Baseboard	Clean		6.00	LF	$1.20	$7.20	T	S
Water								

Structure Total	$7.20
Contents Total	$78.25
Room Total	$85.45

ROOM NOTES:

Room: F-Bathroom2 (L=15'0" W=5'4" H=8'0")

cfRoom	640.00	syFlooring	8.89	lfCeiling Perimeter	40.67
sfCeiling	80.00	sfWalls	325.33	lfFloor Perimeter	40.67
sfFloor	80.00			sfWalls/Ceiling	405.33

Object	Service	Qualifier	Quantity	UOM	Price	Total	Tax	Type
Dryer	Clean and Polish		1.00	EA	$10.00	$10.00	T	C
Washer	Clean and Polish		1.00	EA	$10.00	$10.00	T	C

Structure Total	$0.00
Contents Total	$20.00
Room Total	$20.00

ROOM NOTES:

SERVPRO ScanFB™

Date: 02/08/2002 12:16:29 PM Page: 5

Insured: Rauch Thomas

SUMMARY TOTALS:		
STRUCTURE:	$157.00	
CONTENTS:	$752.00	
SUBTOTAL:		$909.00
Add 10.00% OVERHEAD	$0.00	
Add 10.00% PROFIT	$0.00	
TOTAL PROFIT:		$0.00
Taxable Items:	$909.00	
6.00% TAX		$54.54
ESTIMATE TOTAL:		$963.54

CATEGORY TOTAL:	
MITIGATION:	$0.00
RESTORATION:	$963.54
REPLACEMENT	$0.00
	$963.54

SERVPRO Scader™

Special Limits Involved:

Special Limit Category	Item Limit	Amount Over	Aggregate Limit	Amount Over	Maximum RC Benefits Remaining
(BP) Business Property	.00	.00	1,000.00	.00	**
(FA) Firearms	.00	.00	2,500.00	.00	**
(HC) Home Computer	.00	.00	5,000.00	.00	**
(JF) Jewelry & Fur	1,500.00	.00	2,500.00	.00	**
(MO) Money	.00	.00	200.00	.00	**
(OR) Oriental Rugs	5,000.00	.00	10,000.00	.00	**
(SG) Silver and Goldware	.00	.00	2,500.00	.00	**
(SI) Securities and Negotiable Instruments	.00	.00	1,000.00	.00	**
(ST) Stamps and Trading Cards	.00	.00	2,500.00	.00	**
(TR) Trailers	.00	.00	1,000.00	.00	**
(WC) Watercraft	.00	.00	1,000.00	.00	**

Replacement Cost of Personal Property Notice $833.81

Your policy and/or endorsements to your policy provides replacement cost for personal property items. Only Actual Cash Value can be paid unless items are actually replaced.

Please submit receipts for reimbursement of the Replacement Cost. Your policy provisions allow up to 2 years from date of loss to repair or replace items. The column entitled 'RC BENEFITS REMAINING' lists the maximum amount eligible for payment beyond the Actual Cash Value. When an (**) appears, a special policy limit may apply.

** For each override code, Maximum Replacement Cost Benefits remaining are based on individual policy limitations.

Please refer to the claim number and item number when submitting any receipts for reimbursements.

SUPER 8 MOTEL CLEARFIELD
ROUTE 2, BOX 242 C
CLEARFIELD, PA 16830
PHONE/FAX 814-768-7580

MONA RAUCH
DEACON RD
CLEARFIELD, PA 16830

FOLIO: 52439 ROOM:103 REG:
ARRIVE: 02/18/02 DEPART: 02/28/02
TODAY: 02/28/02
#GUESTS: 2

RATE: 58.49
TIME CHECKED IN: 08:51 TIME CHECKED OUT:

ROOM #	SH	DATE	CD	DESCRIPTION	AMOUNT	BALANCE
103	C	02/18/02	E	ROOM RENT	65.69	65.69
103	C	02/18/02	F	ROOM TAX	3.94	69.63
103	C	02/19/02	E	ROOM RENT	65.69	135.32
103	C	02/19/02	F	ROOM TAX	3.94	139.26
103	A	02/28/02	E	ROOM RENT	65.69	204.95
103	A	02/28/02	F	TAX	3.94	208.89
103	A	02/28/02	E	ROOM RENT	65.69	274.58
103	A	02/28/02	F	TAX	3.94	278.52
103	A	02/28/02	E	ROOM RENT	65.69	344.21
103	A	02/28/02	F	TAX	3.94	348.15
103	A	02/28/02	E	ROOM RENT	65.69	413.84
103	A	02/28/02	F	TAX	3.94	417.78
103	A	02/28/02	E	ROOM RENT	65.69	483.47
103	A	02/28/02	F	TAX	3.94	487.41
103	A	02/28/02	E	ROOM RENT	65.69	553.10
103	A	02/28/02	F	TAX	3.94	557.04
103	A	02/28/02	E	ROOM RENT	65.69	622.73
103	A	02/28/02	F	TAX	3.94	626.67
103	A	02/28/02	E	ROOM RENT	65.69	692.36
103	A	02/28/02	F	TAX	3.94	696.30

H********** TOTAL DUE..... 696.30

ROOM RENT.. 656.90 ROOM TAX... 39.40

WRITE BOX 27970,MNPLS,MN 55427 OR VIEW OR WEBSITE ABOUT PRIVACY.

Signature X_____

Please contact the manager about any issue with your stay. Super 8 Motels, Inc. or affiliates may contact you about goods and services unless you call 877-244-7633 or write to Box 27970, Minneapolis, MN 55427-0970 to opt out. View our Super 8 website about privacy.

SUPER 8 MOTEL CLEARFIELD
ROUTE 2, BOX 242 C
CLEARFIELD, PA 16830
PHONE/FAX 814-768-7580

PRESTON RAUCH

DEACON RD
CLEARFIELD, PA 16830

FOLIO: 52459 ROOM:113 REG:
ARRIVE: 02/18/02 DEPART: 02/28/02
TODAY: 02/28/02
#GUESTS: 1

RATE: 40.39

OOM #	SH	DATE	CD	DESCRIPTION	AMOUNT	BALANCE
13	C	02/18/02	E	ROOM RENT	40.39	40.39
13	C	02/18/02	F	ROOM TAX	2.42	42.81
13	C	02/19/02	E	ROOM RENT	40.39	83.20
13	C	02/19/02	F	ROOM TAX	2.42	85.62
13	C	02/20/02	E	ROOM RENT	40.39	126.01
13	C	02/20/02	F	ROOM TAX	2.42	128.43
13	C	02/21/02	E	ROOM RENT	40.39	168.82
13	C	02/21/02	F	ROOM TAX	2.42	171.24
13	C	02/22/02	E	ROOM RENT	40.39	211.63
13	C	02/22/02	F	ROOM TAX	2.42	214.05
13	C	02/23/02	E	ROOM RENT	40.39	254.44
13	C	02/23/02	F	ROOM TAX	2.42	256.86
13	C	02/24/02	E	ROOM RENT	40.39	297.25
13	C	02/24/02	F	ROOM TAX	2.42	299.67
13	C	02/25/02	E	ROOM RENT	40.39	340.06
13	C	02/25/02	F	ROOM TAX	2.42	342.48
13	C	02/26/02	E	ROOM RENT	40.39	382.87
13	C	02/26/02	F	ROOM TAX	2.42	385.29
13	C	02/27/02	E	ROOM RENT	40.39	425.68
13	C	02/27/02	F	ROOM TAX	2.42	428.10

********** TOTAL DUE..... 428.10

ROOM RENT.. 403.90 ROOM TAX... 24.20

WRITE BOX 27970,MNPLS,MN 55427 OR VIEW OR WEBSITE ABOUT PRIVACY.

Signature X_____

Please contact the manager about any issue with your stay.
Super 8 Motels, Inc. or affiliates may contact you about goods and services unless you call 877-244-7633 or write to Box 27970, Minneapolis, MN 55427-0970 to opt out. View our Super 8 website about privacy.

Checks Accepted ONLY if U.I.P. Member agrees to Super 8 Policies

Robson Lapina

Forensic Engineers, Architects, Scientists & Fire Investigators

PHONE: 724-772-2244
800-813-6735

404 COMMERCE PARK DRIVE
CRANBERRY TOWNSHIP, PA 16066

FAX: 724-772-2256
WWW.ROBSONLAPINA.COM

November 12, 2002

Cathy Martz
Claims Specialist
State Farm Insurance Company
100 Old Pond Road
P.O. Box 100
Bridgeville, PA 15017-0100
412-257-5852 Fax: 5762

RE: Thomas Rauch – Oil Boiler Inspection, Claim # 38-P546-670 (RL #02WP197)

INTRODUCTION:

On September 11, 2002, I was requested by State Farm Insurance to inspect the oil-fired hot water boiler in the home of Thomas and Mona Rauch. The residence was located at P.O. Box 443, Deacon Road, Clearfield, PA 16830.

On January 23, 2002, the hot-water boiler at the Rauch residence malfunctioned and created a black oil soot film throughout the home. The home's walls, windows, ceilings, appliances, carpets, draperies, etc. had been contaminated with a black oily film. The caused was determined to be the oil-fired boiler.

On October 15, 2002, I inspected the oil-fired hot-water boiler at the residence of Thomas and Mona Rauch. All interior cleanup had been completed prior to my examination. During my examination, I took 36 photographs of the Rauch home and incident boiler were taken.

The oil-fired boiler was installed during the construction of the home, approximately 2 years before the furnace malfunction. The boiler was installed, set up, and tested by Richard Bloom (814-577-6117 or 236-0515) in the fall of 1999 while the home was under construction. One digitized photograph of the oil-fired boiler, dated January 26, 2002 was taken by a State Farm adjuster prior to the boiler repairs. See Attachment "A".

The purpose of my inspection was to determine if Richard Bloom properly installed and serviced this boiler and if Bloom's actions resulted in the black soot damage.

My initial analysis and findings of this incident are included in this letter report.

EVALUATION OF THE RAUCH HOME:

The Rauch home was a two-story home with a full basement. See Photographs #1 through #4. Prior to my inspection, the black soot had been cleaned from the walls, windows, light switch covers, ceiling, and draperies.

The oil-fired boiler and fuel tank were installed in the basement in the front right corner, as viewed from the street. See Photographs #5 and #6.

Prior to my inspection, the boiler had been cleaned and serviced. See Attachment "A" for the physical condition prior to servicing.

DESCRIPTION OF THE INCIDENT BOILER:

The incident oil-fired hot-water boiler was installed in the fall of 1999 by Richard Bloom.

The incident boiler specifications are as follows: See Photographs #7 & #8.

Manufacturer:	Slant Fin Corp.
Model:	Liberty II, LD-30 PT
Serial Number:	D0000902
Capacity:	1.1 gph (134, 000 Btu/hr input; 117,000 Btu/hr output) to 1.25 gph (151,000 Btu/hr input; 131,000 Btu/hr output)
Rating:	50 psi water (MAWP) at 240°F (MAWT)
Relief Valve:	151 lb/hr minimum capacity
Vent System:	6" outlet, w/barometric damper.
Electrical:	115V/1Ph/60Hz

The incident burner specifications are as follows: See Photographs #9 & #10.

Manufacturer:	Beckett "AFG" Series Oil Fired Burner
ATC Code:	AF60ZS
Firing Range:	0.85 to 1.35 gph
Head:	F4S
Static Plate:	2-3/4" U
Fuel pump/press:	Suntec A2VA 7116 / 100 psig

ANALYSIS:

1. During the inspection of the exterior of the home, I found evidence of black soot on and around the exhaust vent of the furnace under the front porch (Photographs #11, #12, #13, & #14) and around the fish-mouth connection on the barometric damper (Photographs #15, #16, & #17.).

2. The interior of the home had been cleaned prior to my inspection. Therefore, inside the house, I only examined the boiler.

3. I examined and tested the oil-fired hot-water boiler. The specifics are as follows:

	Manufacturer's initial settings (Photograph #19)	As found (Photograph #18)
Primary air: (Air shutter)	#8 (approximate)	#6 (See note 1)
Secondary air: (Air band)	#0 (fully closed)	#0 (fully closed)
Nozzle range:	0.85 to 1.35	1.00 Delavan 80°A nozzle. See Photographs #19 & #20
Electrode settings:	Gap – 5/32", Above – 7/16"; Projection – 1/16" See Page 15 of Attachment "B"	
Over-fire draft:	0.02" w.c. (minimum)	0.02 w.c. (Attachment "C")
Smoke Index:	0 to trace	1 to 2 (Attachment "C")

Note1: I found the set-screws which hold the air shutter in position to be loose and the air shutter was easily moved. The air shutter set screws should have been tightened so that the setting would not be accidentally moved or vibrate to a different position.

ANALYSIS OF INCIDENT OIL-FIRED BOILER:

1. Beckett provides specific start-up settings for the burner ignition electrodes. See Attachment "B". Upon examination of the burner assembly, the electrode settings are near the factory specifications.

2. The new burner nozzle was of a correct size (1.00 gph) and type (80°A) for Model Number LD-30H. The LD-30 PT boiler most likely came supplied with a 1.10 gph or a 1.25 gph nozzle and has since been downgraded to a 1.00 gph nozzle. See Page 2 of Attachment "B".

3. Visually, the burner air settings are set too rich. The Set-Up Procedure for a 1.00 gph nozzle on a LD-30H specifies an initial air shutter setting of "8" and the air band to be "Closed." The air shutter was found at "6" and the air band was closed. I would not expect the air setting to vary more than ¼ from the setup procedure. An air shutter setting of "6" would indicate a too rich combustion operation.

4. The burner combustion was not functioning correctly. The smoke index showed a smoke of 1 to 2. A smoke index of 1 to 2 indicates a too rich combustion operation. The smoke index should be zero but no more than a trace. See Attachment "C".

5. The over-fire draft or firebox draft was 0.02" w.c. This draft should be 0.02" w.c. or slightly greater. This over-fire draft was acceptable. See Attachment "C".

6. To obtain a smoke index of zero, I opened the air shutter from 6.0 (Photograph #24) to 8.25 (Photograph #25).

7. As a result of opening of the air shutter, the draft was reduced to 0.01"w.c. It was necessary to relocate the barometric damper weight to return the draft back to 0.02"w.c.

8. The manufacturer (Attachment "B" page 3) states that the bottom of the barometric damper must be 18" (minimum) above the boiler outlet with the draft/smoke sample hole, 9" above the boiler. The actual barometric draft damper was less than 6" above the boiler. See photograph #17 and Attachment "A".

<u>COMPARISON OF THE 1/16/02 INCIDENT PHOTOGRAPH (Attachment "A") TO THE 10/15/02 SITE INSPECTION PHOTOGRAPH (Photograph #24):</u>

1. The incident boiler did not have an inline fuel filter between the fuel tank and the fuel pump. Also, according to Mr. Rauch's statement to me, the incident fuel supply was connected to the tank's drain and not taken from an overhead dip tube. It should be noted that two (2) more filters exist before the fuel travels through the spray nozzle. One filter is located in the inlet housing of the fuel pump and a final filter is located in the burner nozzle. Without inspecting the incident pump filter and the incident burner nozzle filter, insufficient information exists to determine if the lack of a in-line filter contributed to the black soot problem.

2. The incident boiler did not have an electrical interlock (no yellow wires) between the auxiliary draft fan and the burner. See Attachment "A". The repaired boiler did have an electrical interlock between the auxiliary draft fan and the burner. See the yellow signal wires in Photographs #6, #7, #12, #14, #17, #22, #26, #27, & #28. The boiler did not have a chimney; therefore, the auxiliary draft fan must be operating before the burner can ignite. I tested the auxiliary draft fan pressure switch. When the impulse tube to the pressure switch was removed, the burner would shut-down immediately. Also, the burner would not start without the impulse tube connected. The boiler controls have been modified since the incident to include the auxiliary draft fan switch in the burner control circuitry.

3. The black smoke residue under the porch and on the fish-mouth connection at the barometric damper shows that the boiler was operating rich and under positive pressure. The boiler's ignition most likely occurred simultaneously with the startup of the auxiliary exhaust fan. This situation would cause some black residue within the home.

4. The extensive black smoke and soot within the home is more of an indication that the boiler combustion was not correctly set. The electrode setting, the fuel pressure (100 psig), the over-fire draft (0.02" w.c.), the CO2 (12% to 13%) or O2 (4.7% to 3.3%) and the smoke index (zero) should all have been set prior to releasing the boiler to the owner. No burner set-up data sheet was created by Richard Bloom and supplied to the owner.

5. The ignition sticker located on the burner states for Model # L-30 that the ignition, CO_2 and smoke were all "checked" and inspected by #268. This tag also contains writing that looks like "Beck", or short for "Beckett" type burner. It is unknown who applied this inspection sticker to the burner assembly. See Photographs #22 & #23.

6. Because the fuel tank level is higher than the fuel pump, an oil safety valve (OSV) is always recommended on the fuel line prior to the pump. No OSV existed during the original installation nor was it added during the repairs. Refer to Attachment "D".

FINDINGS:

Within the bounds of reasonable engineering certainty, and subject to change if additional information becomes available, it is my professional opinion that:

1. Richard Bloom failed to properly install and set-up the oil-fired boiler which was the primary contributing cause of the black soot contamination to the Rauch home.
2. Richard Bloom failed to properly perform the following services: (in order of importance)
   1) Electrically interlock the auxiliary exhaust draft fan pressure switch with the burner controls.
   2) Set up the burner with adequate combustion air for a smoke index of zero and 0.02" w.c. (minimum) over-fire draft.
   3) Set burner electrodes, set fuel pressure, set air-fuel mixture by CO, CO_2, or O_2 in the flue gases, and tighten down the air shutter set screws.
   4) Install an in-line supply fuel filter on the inlet to the burner.
   5) Install the barometric draft damper at least 18" above the boiler outlet.
   6) Supply the owner with a burner certification of performance sheet.
   7) Install an oil safety valve (OSV) in the fuel suction line.
3. The failure of Richard Bloom to properly perform above items 1) thru 3) directly resulted in the soot damage to the Rauch home. The failure to perform items 4) & 5) should have been performed during the initial installation and may have contributed to this incident. The failure to perform items 6) & 7) did not contribute to this incident but should have been performed during the initial installation.

If you need further information, please do not hesitate to call.

Sincerely,

Mark A. Sokalski, P.E.

COMMONWEALTH OF PENNSYLVANIA
REGISTERED PROFESSIONAL
MARK ALBERT SOKALSKI
ENGINEER
29783-E

11/12/02

Attachments:

28 mounted photos;

Attachments "A" through "D"

REC'D
NOV 13 2002

PHOTOGRAPH #1

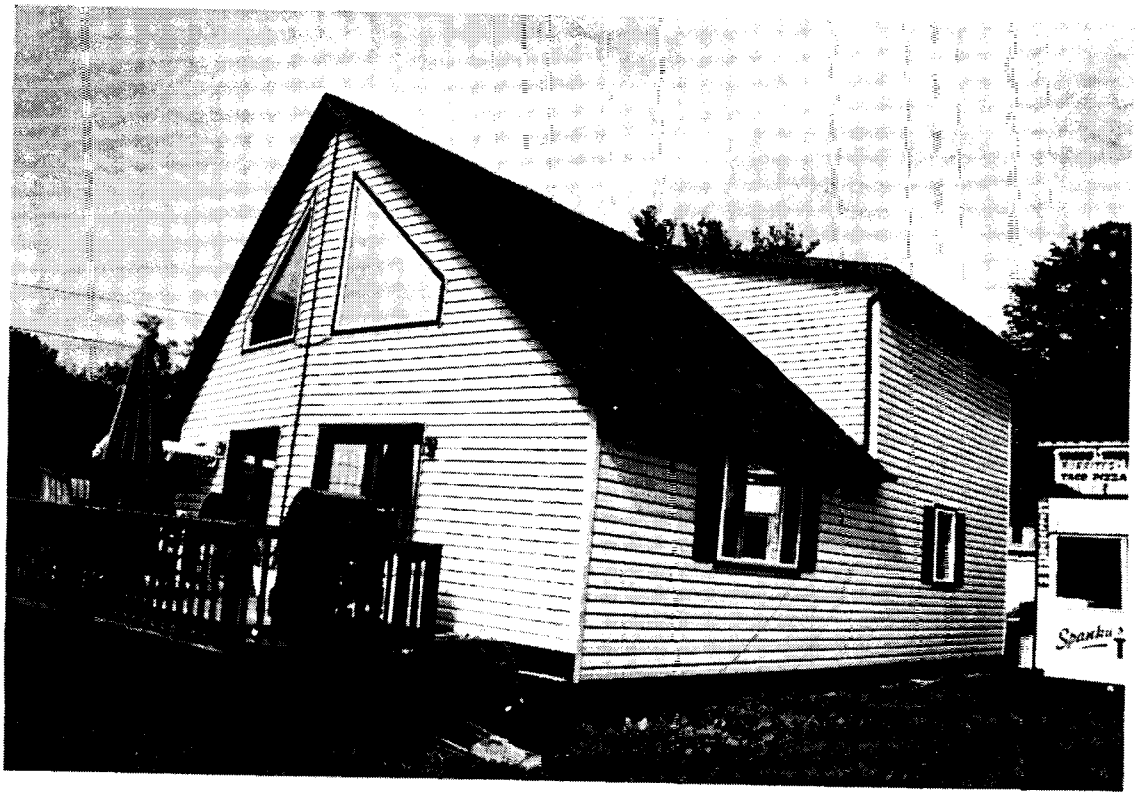

PHOTOGRAPH #2

PHOTOGRAPH #3

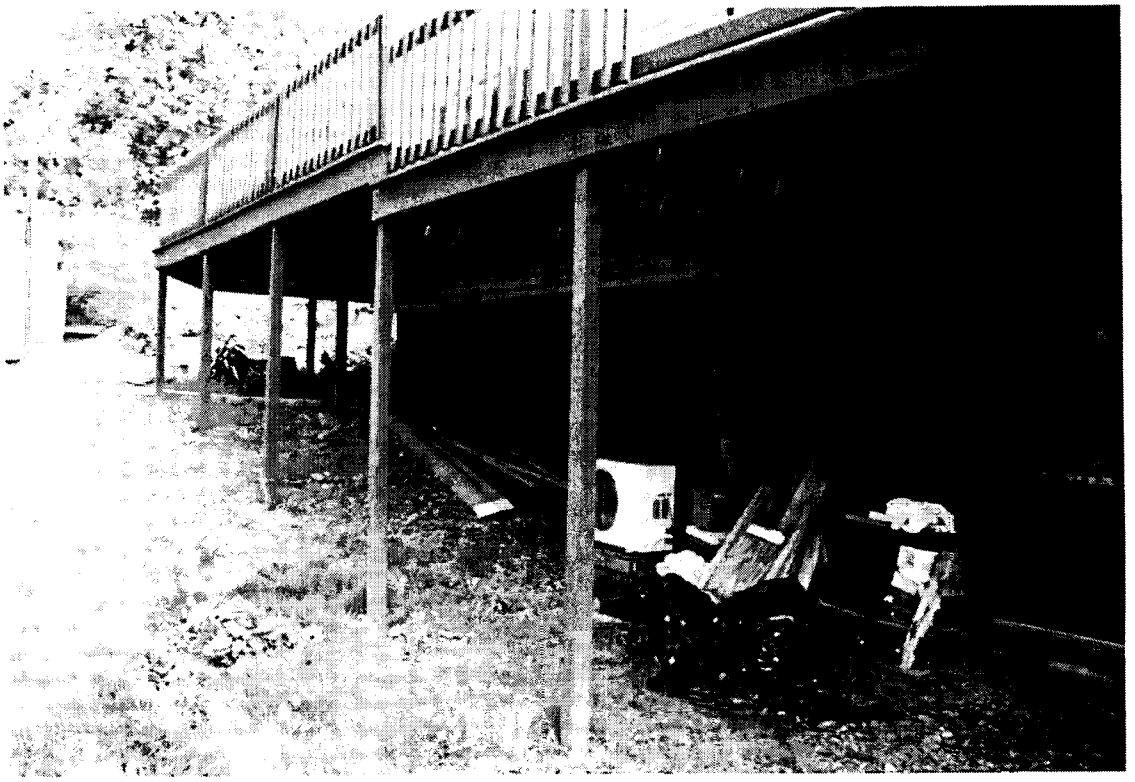

PHOTOGRAPH #4

VENT

FILL

PHOTOGRAPH #5

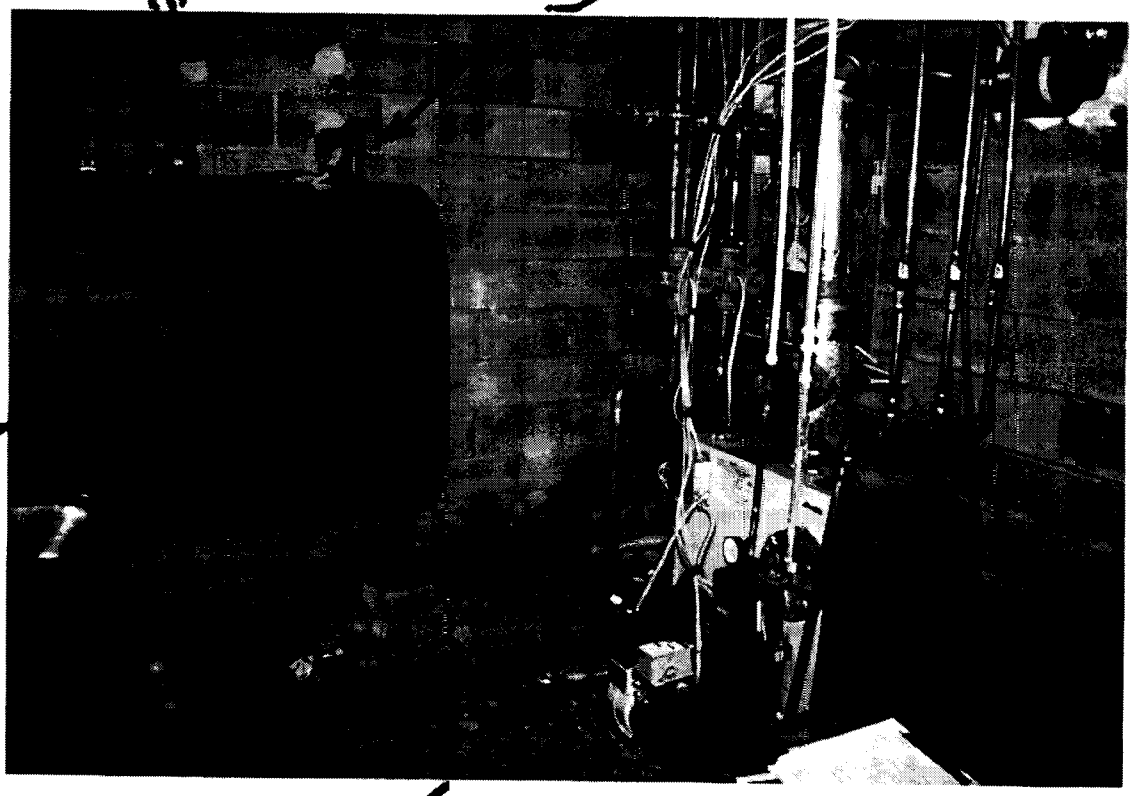

FUEL TANK

INLINE FUEL FILTER

PHOTOGRAPH #6

BAROMETIC DAMPER

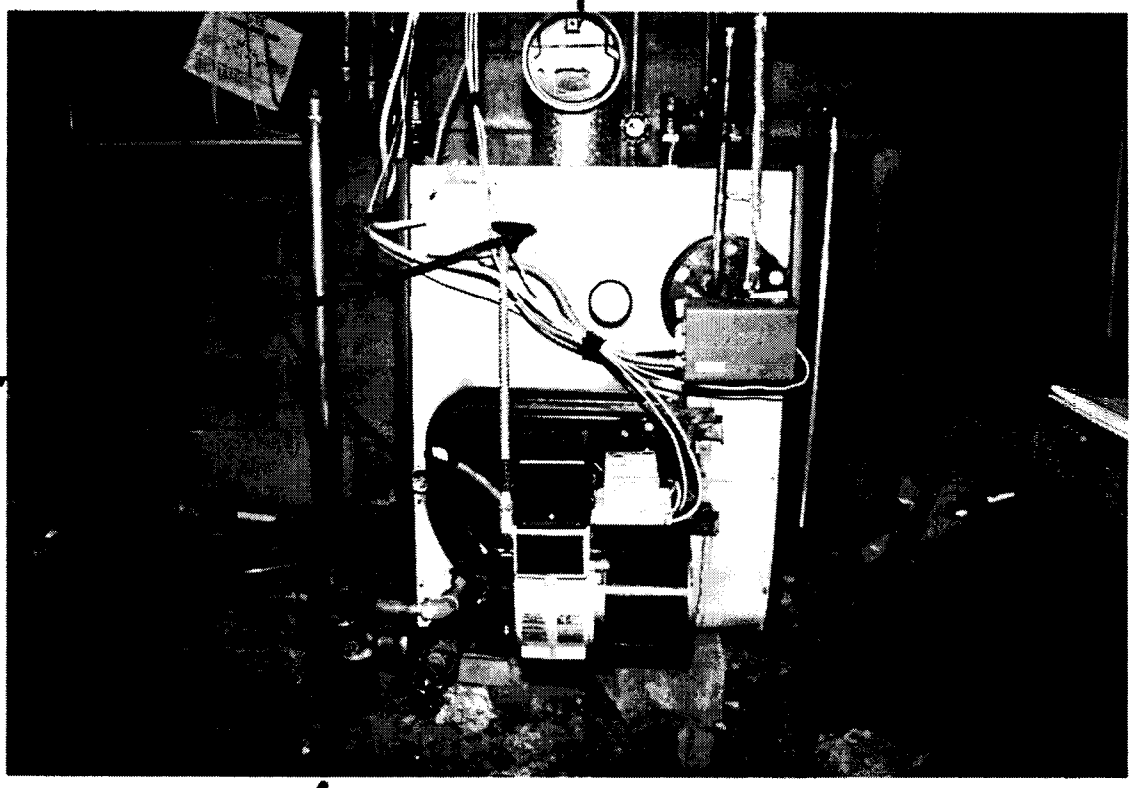

PHOTOGRAPH #7

NAMEPLATE

INLINE FUEL FILTER

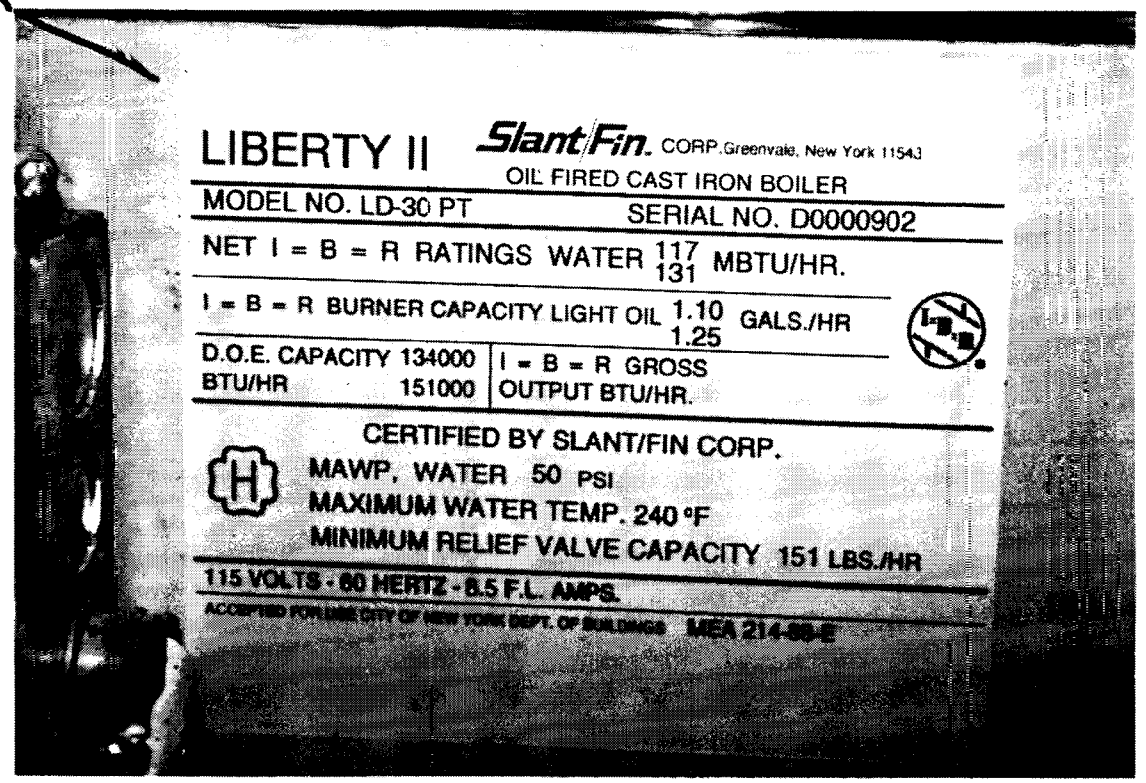

PHOTOGRAPH #8

PHOTOGRAPH #9

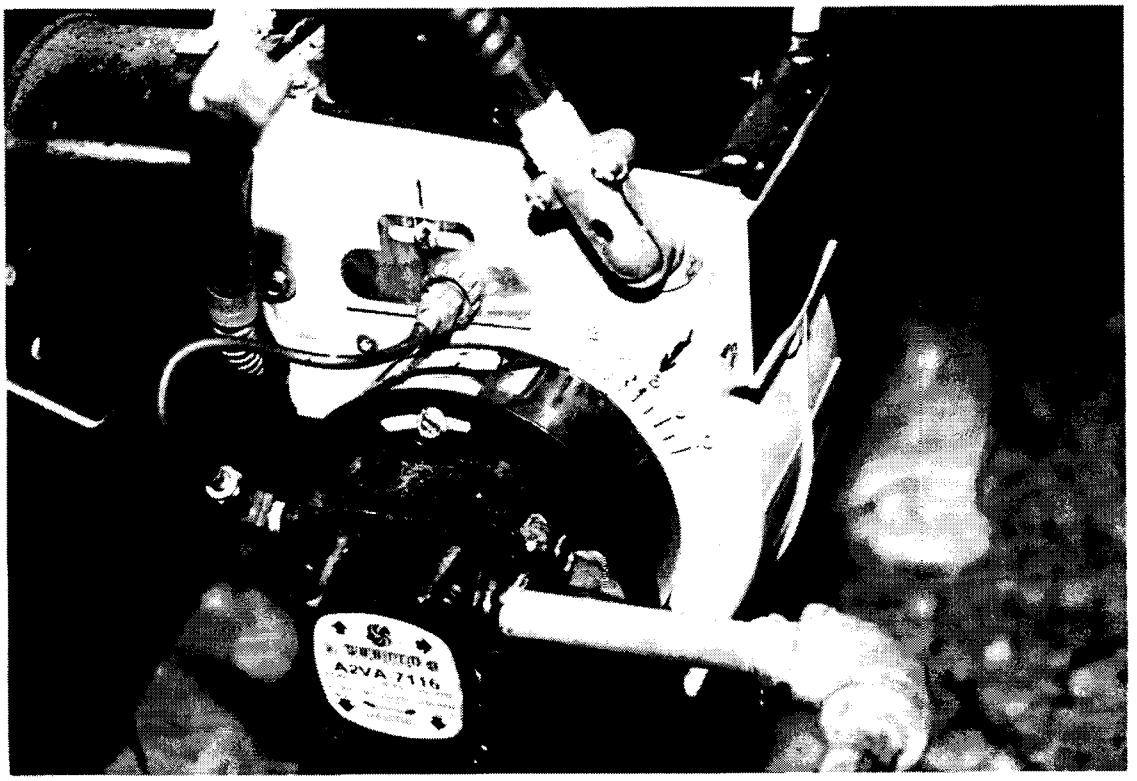

PHOTOGRAPH #10

EXHAUST (UNDER FRONT ARCH)

PHOTOGRAPH #11

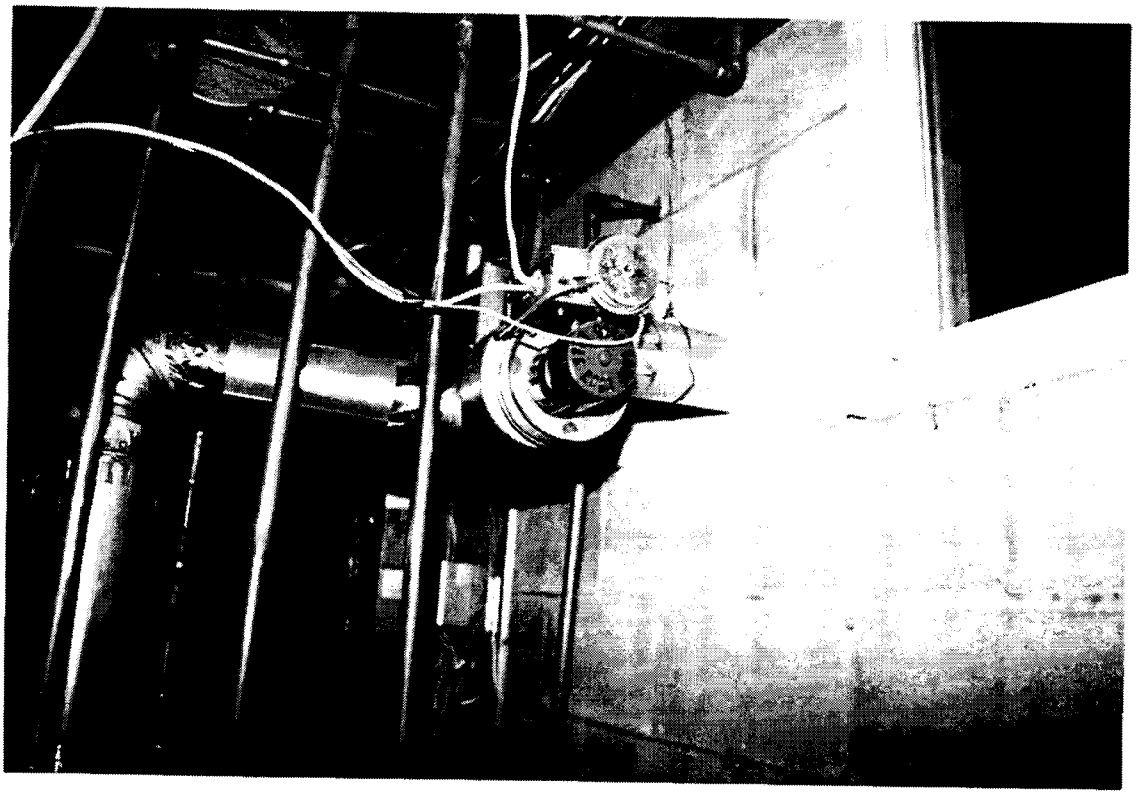

AUX. EXHAUST FAN
INSIDE ABOVE BOILER

PHOTOGRAPH #12

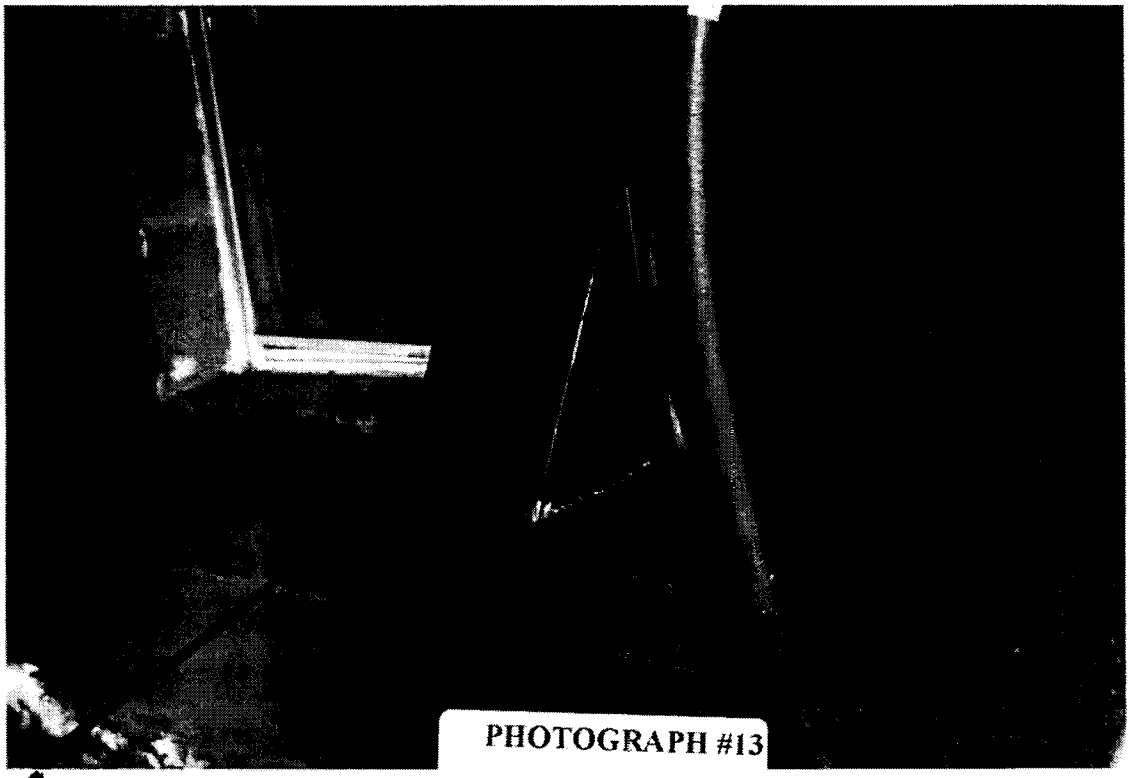

PHOTOGRAPH #13

EXHAUST VENT

IMPULSE TUBE

AUX. FAN SWITCH

NEW YELLOW WIRING

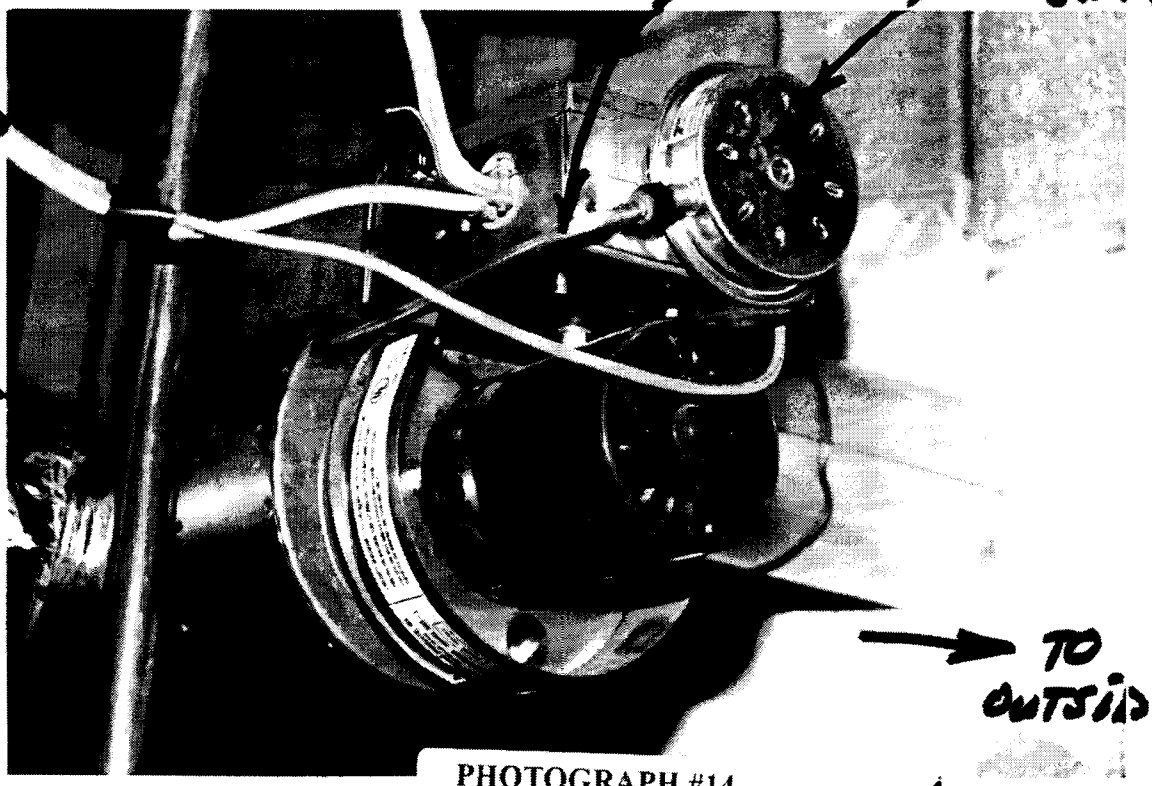

EXHAUST FROM BOILER

TO OUTSIDE

(SEE ABOVE)

PHOTOGRAPH #14

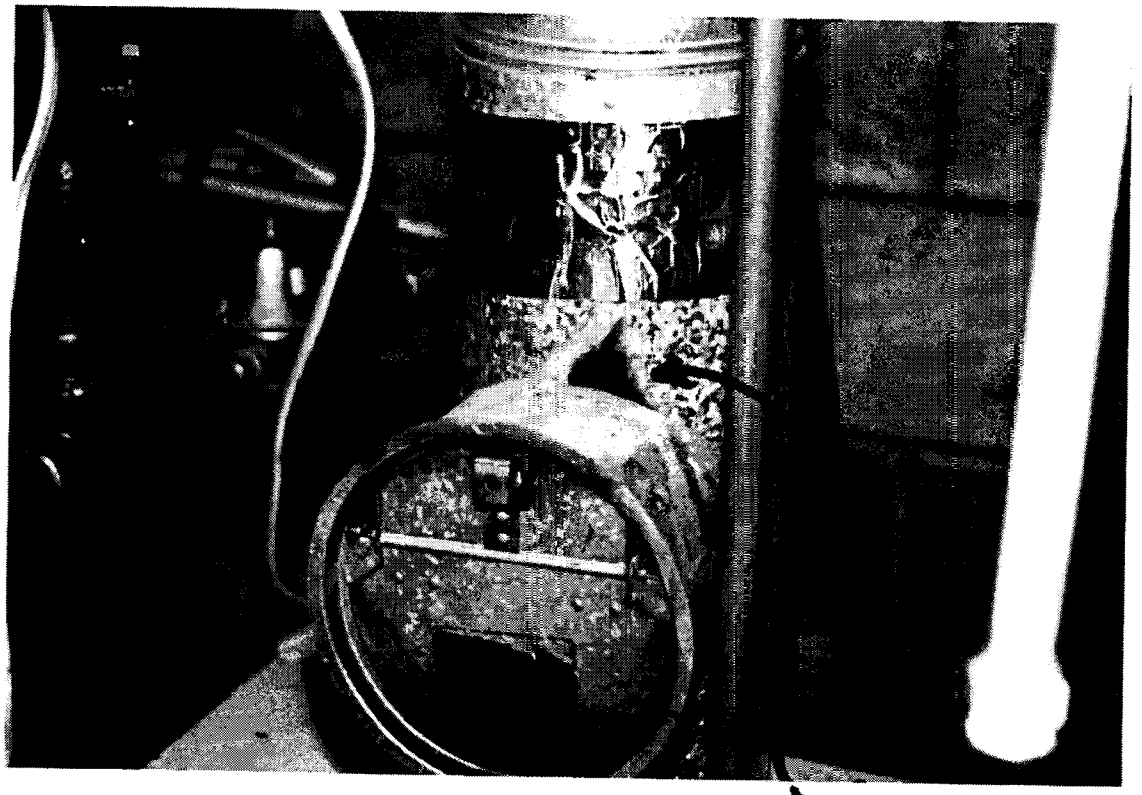

PHOTOGRAPH #15

Soot

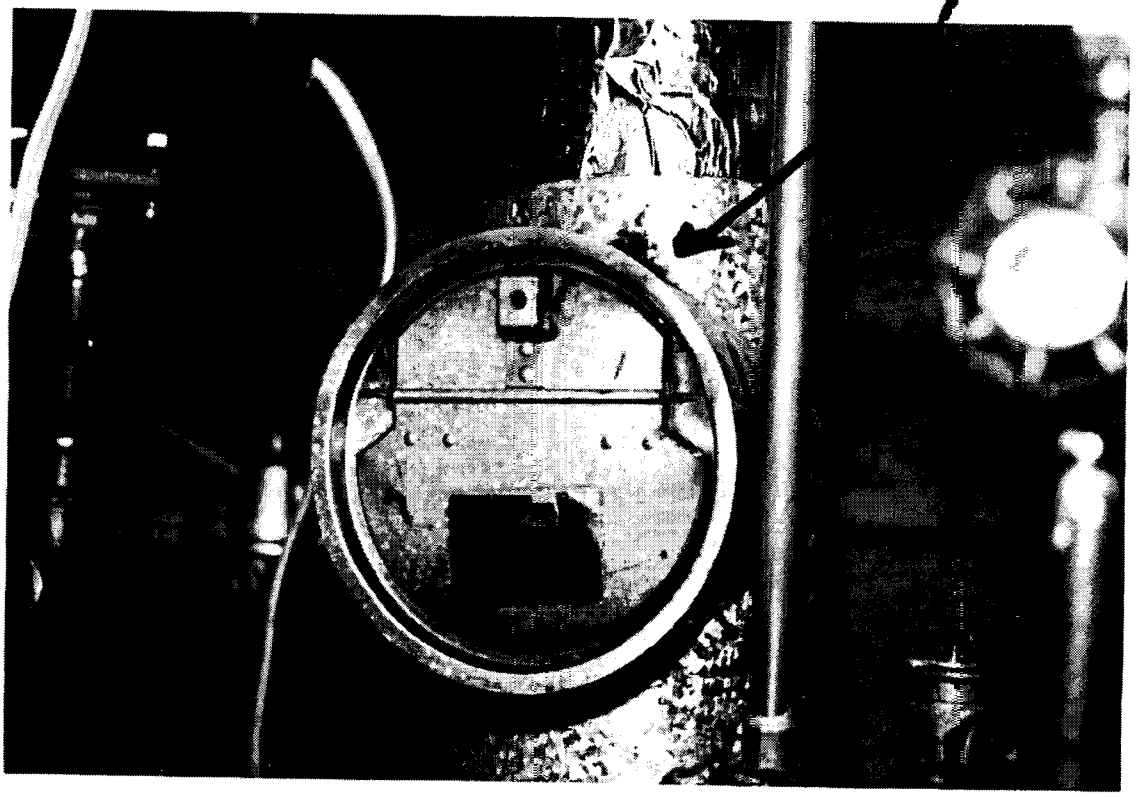

PHOTOGRAPH #16

COLD HOT WATER USAGE

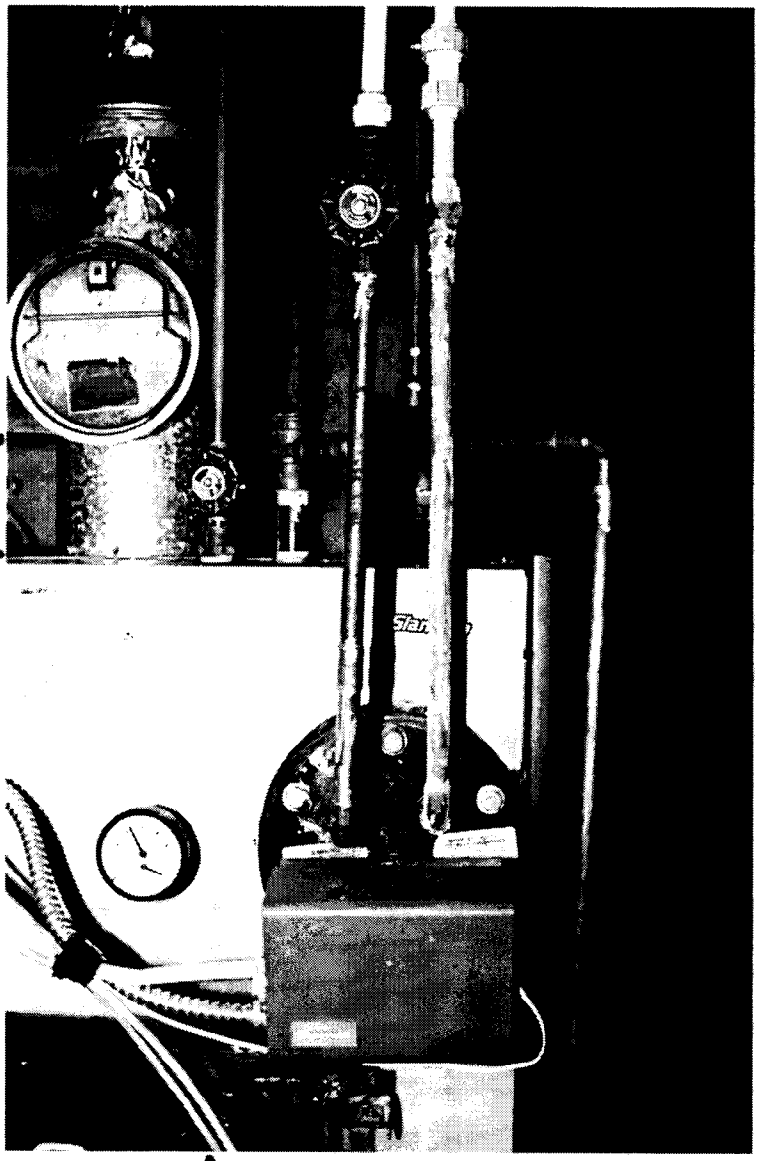

6"

SHOULD BE 18" OR MORE

PHOTOGRAPH #17

NEW YELLOW WIRING

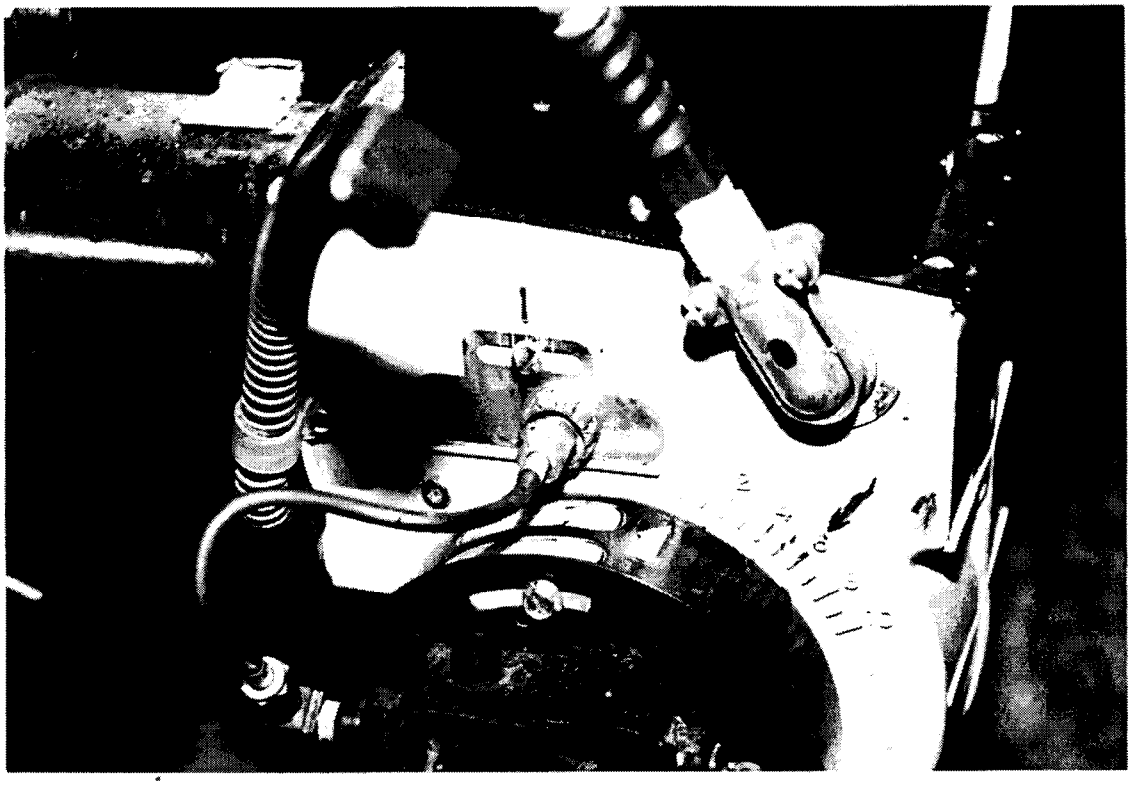

AIR SHUTTER @ 6
AIR BAND @ 0

PHOTOGRAPH #18

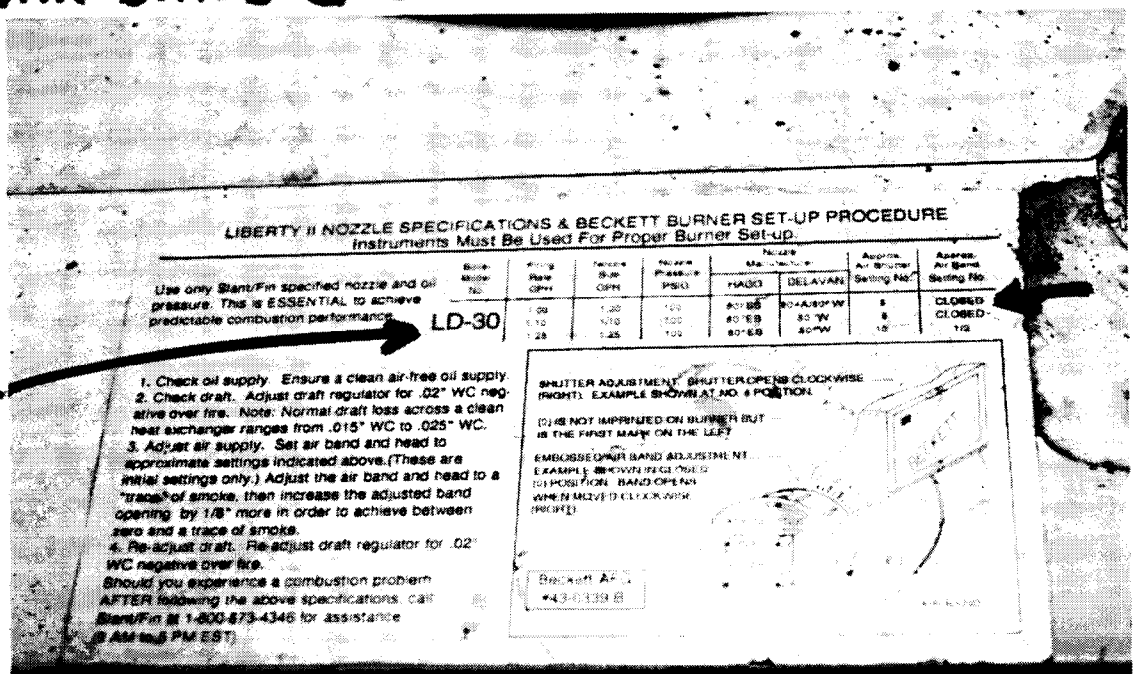

LIBERTY II NOZZLE SPECIFICATIONS & BECKETT BURNER SET-UP PROCEDURE
Instruments Must Be Used For Proper Burner Set-up.

Use only Slant/Fin specified nozzle and oil pressure. This is ESSENTIAL to achieve predictable combustion performance.

LD-30

1. Check oil supply. Ensure a clean air-free oil supply.
2. Check draft. Adjust draft regulator for .02" WC negative over fire. Note: Normal draft loss across a clean heat exchanger ranges from .015" WC to .025" WC.
3. Adjust air supply. Set air band and head to approximate settings indicated above.(These are initial settings only.) Adjust the air band and head to a "trace" of smoke, then increase the adjusted band opening by 1/8" more in order to achieve between zero and a trace of smoke.
4. Re-adjust draft. Re-adjust draft regulator for .02" WC negative over fire.

Should you experience a combustion problem AFTER following the above specifications, call Slant/Fin at 1-800-873-4346 for assistance (8 AM to 5 PM EST).

SHUTTER ADJUSTMENT: SHUTTER OPENS CLOCKWISE (RIGHT). EXAMPLE SHOWN AT NO. 4 POSITION.

(1) IS NOT IMPRINTED ON BURNER BUT IS THE FIRST MARK ON THE LEFT

EMBOSSED AIR BAND ADJUSTMENT
EXAMPLE SHOWN IN (3) POSITION. BAND OPENS WHEN MOVED CLOCKWISE (RIGHT)

PHOTOGRAPH #19

LD 30 1.00 GPH 100 Psi 80°A DELAVAN AIR SHUTTER "8" AIR BAND "CLOSED"

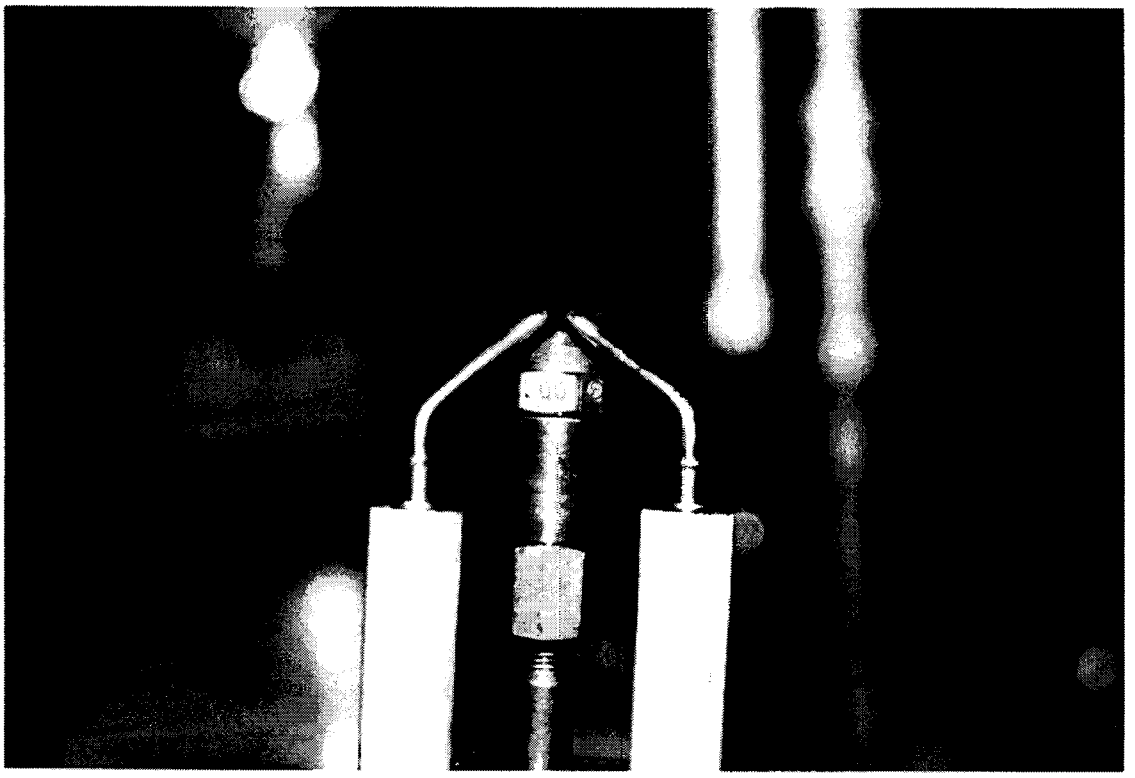

PHOTOGRAPH #20

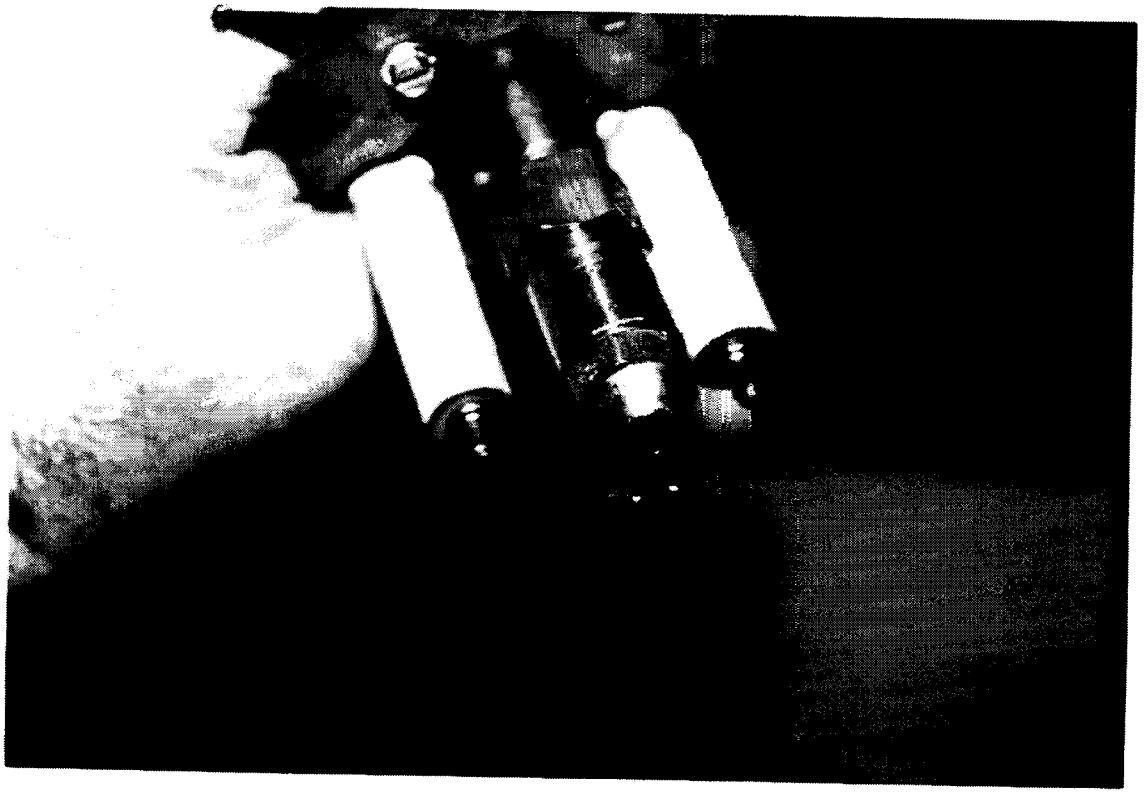

PHOTOGRAPH #21

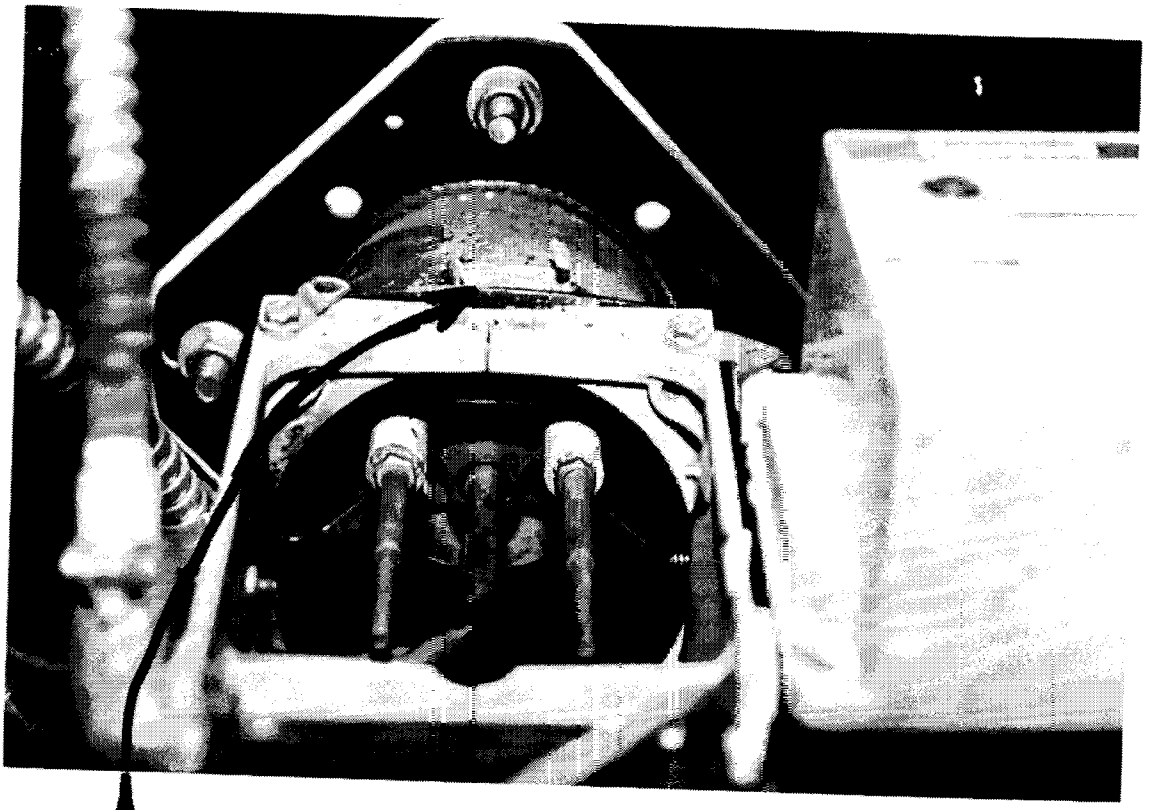

LOCATION A

PHOTOGRAPH #22

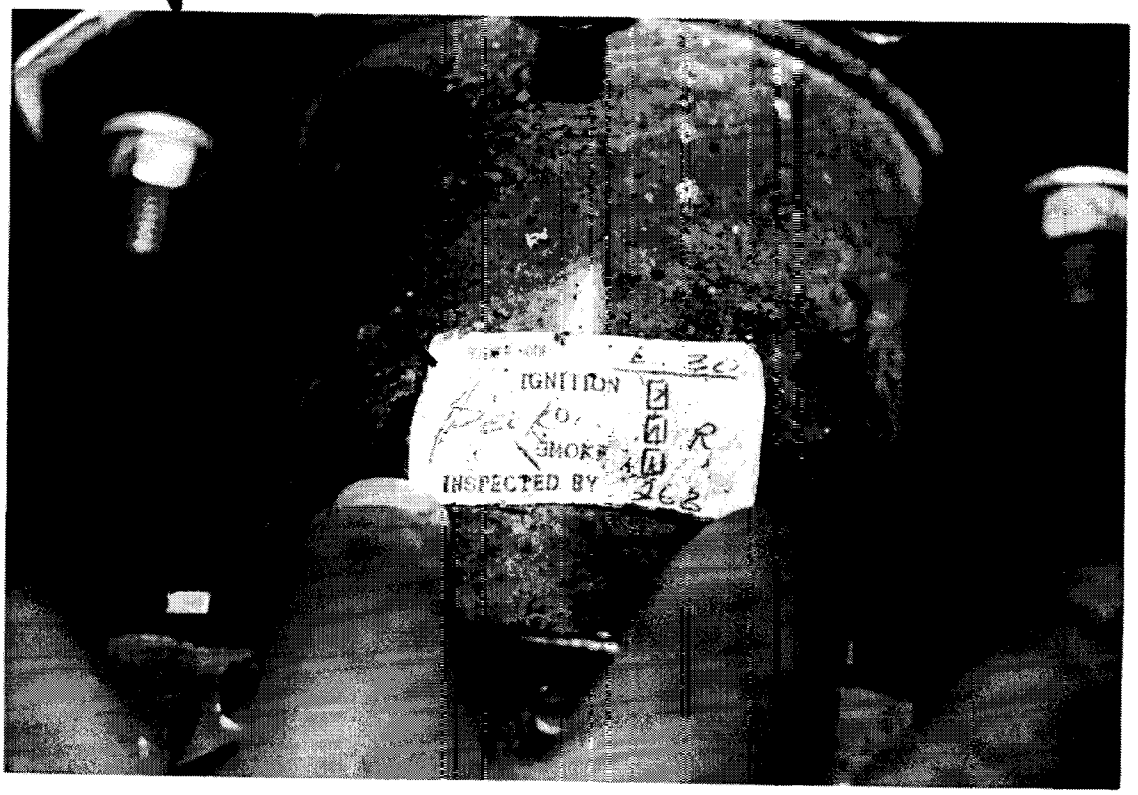

PHOTOGRAPH #23

SMOKE #1 → SET AT #6

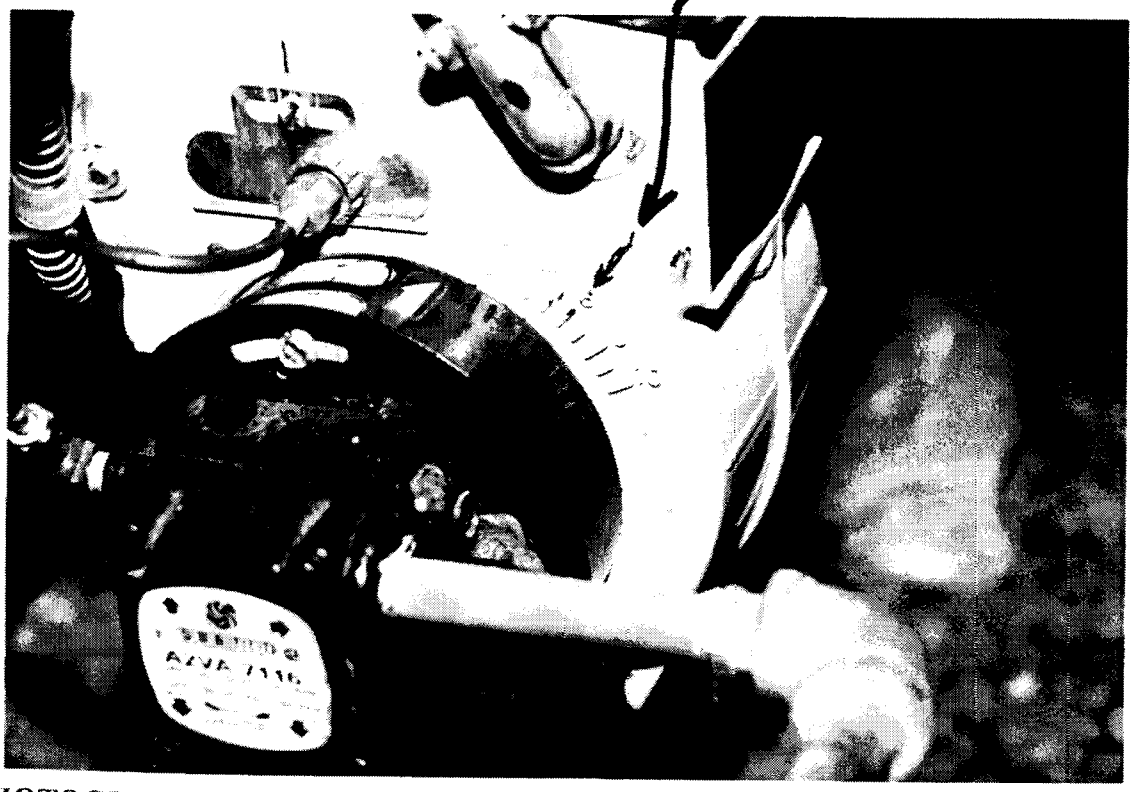

PHOTOGRAPH #24

SMOKE = ZERO → SET AT #8 1/4

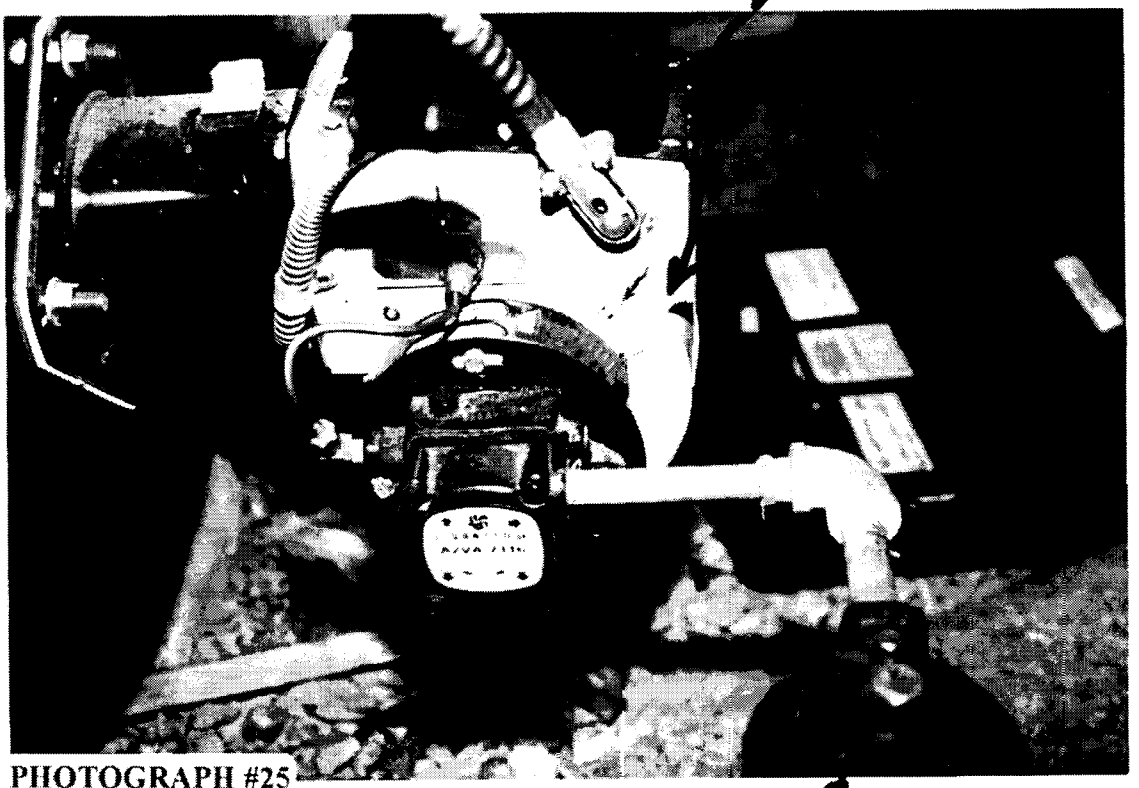

PHOTOGRAPH #25

IN-LINE FUEL FILTER

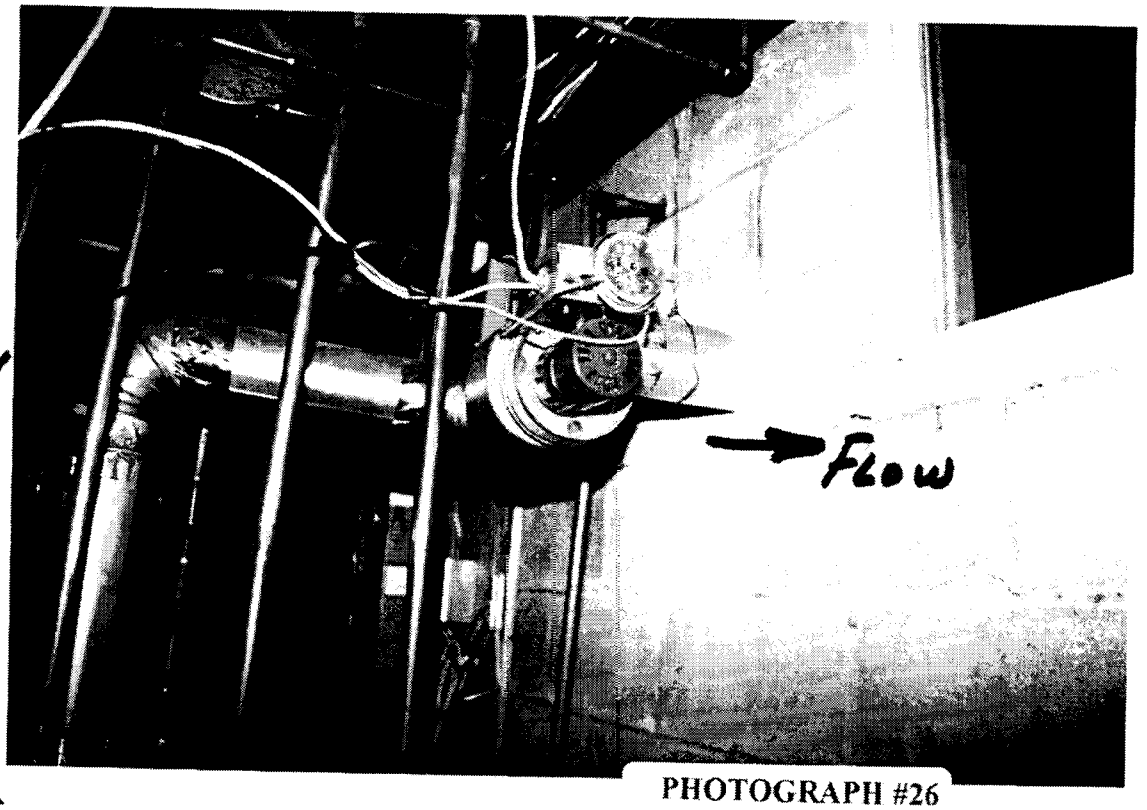

PHOTOGRAPH #26

YELLOW WIRING

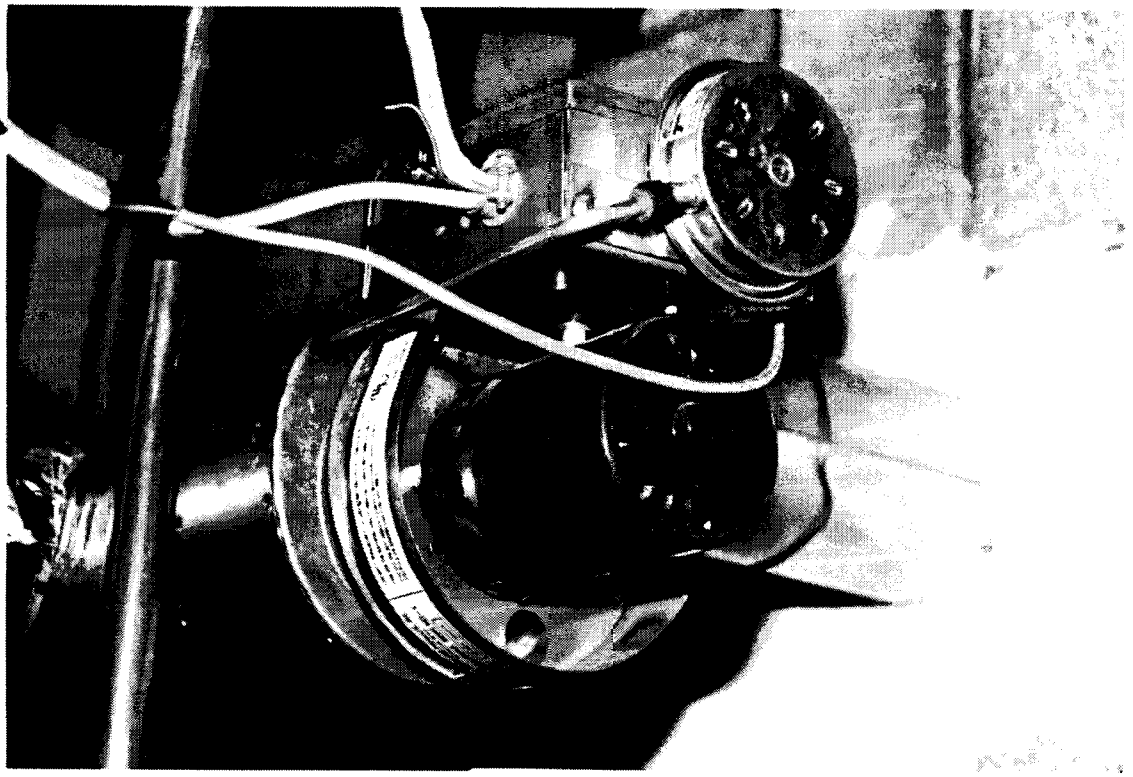

PHOTOGRAPH #27

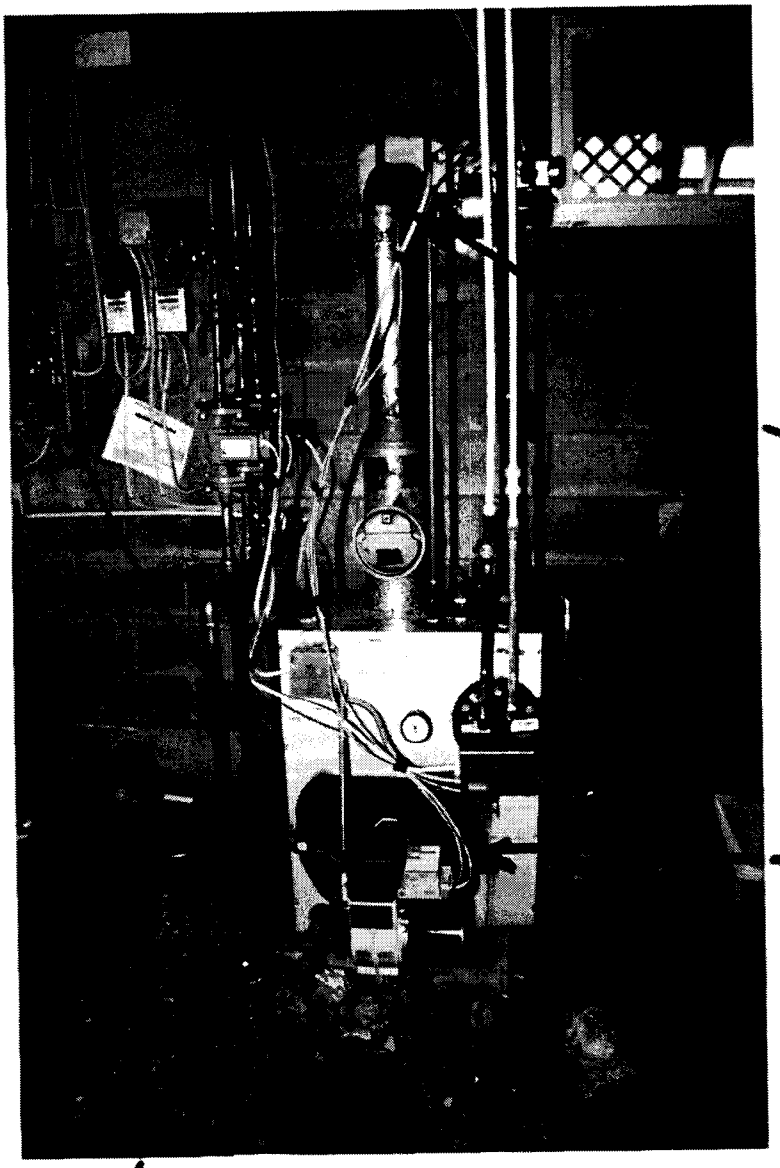

YELLOW WIRING

PHOTOGRAPH #28

IN LINE FUEL FILTER

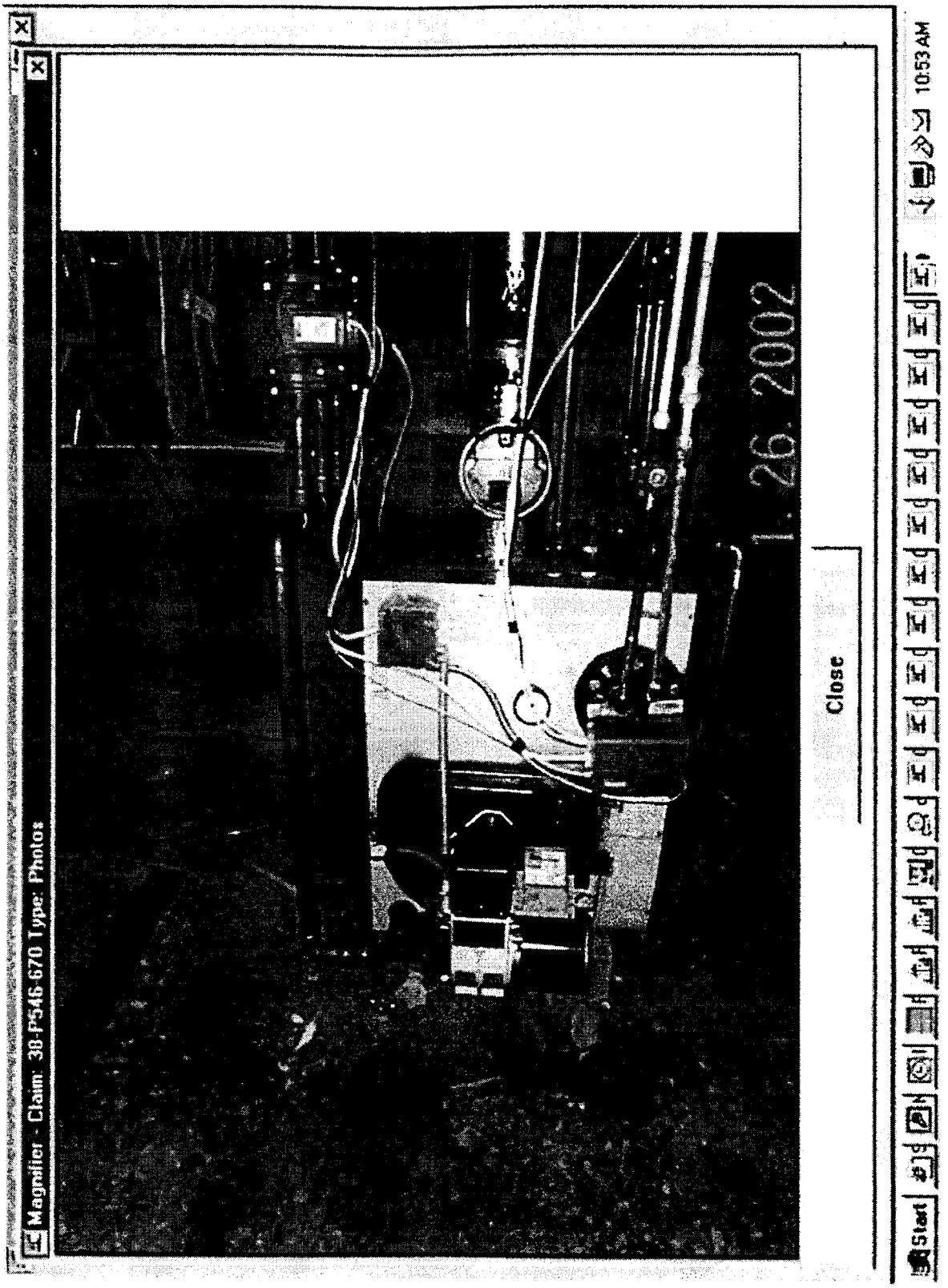

Attachment "A"

Claim: 38-P546-670 Type: Photos

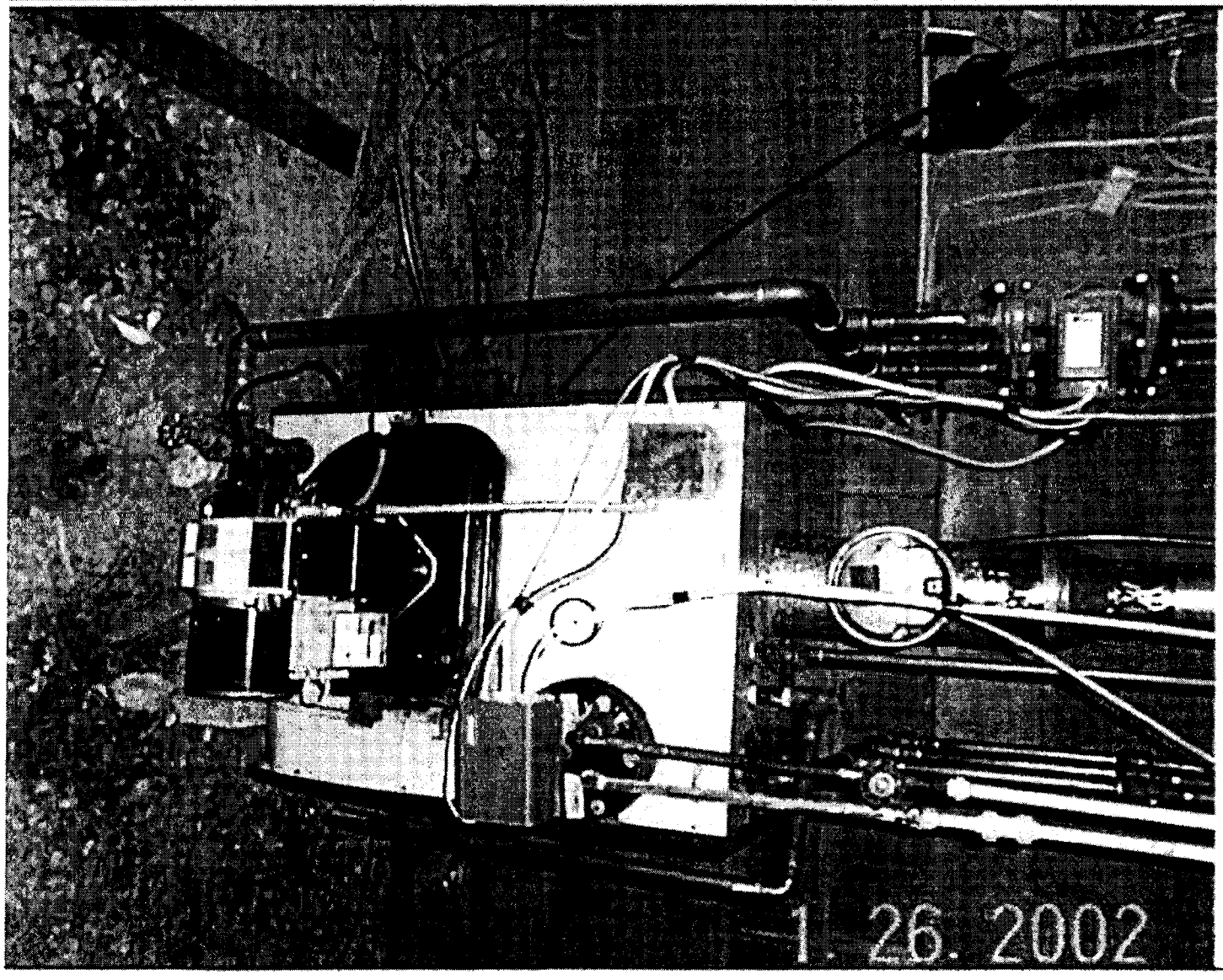

Close

Slant/Fin®

LIBERTY® II

OIL-FIRED WATER AND STEAM BOILERS/NO. 2 OIL

INSTALLATION AND OPERATING INSTRUCTIONS

SAFETY WARNING:

KEEP BOILER AREA CLEAR AND FREE FROM COMBUSTIBLE MATERIALS, GASOLINE AND OTHER FLAMMABLE VAPORS AND LIQUIDS. FAILURE TO ADHERE TO ABOVE SAFETY WARNING, MAY RESULT IN PERSONAL INJURY OR DEATH AND PROPERTY DAMAGE.

CONTENTS ..... PAGE

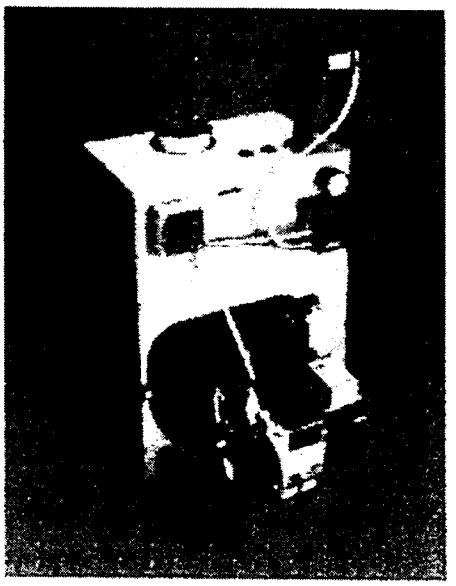

IMPORTANT: The installation of this equipment must conform to the requirements of the authority having jurisdiction or, in the absence of such requirements, to the Installation of Oil Burning Equipment, ANSI/NFPA 31, latest edition, and to the National Electrical Code ANSI/NFPA 70, latest edition. The installation must also conform to the additional requirements in this Slant/Fin Instruction Manual. Where there is any difference, the more stringent requirement shall govern.

In addition, where required by the authority having jurisdiction, the installation must conform to American Society of Mechanical Engineers Safety Code for Controls and Safety Devices for Automatically Fired Boilers, No. CSD-1, latest edition.

THIS MANUAL MUST BE LEFT WITH OWNER AND SHOULD BE HUNG ON OR ADJACENT TO THE BOILER FOR REFERENCE.

IMPORTANT: This boiler must be installed by a trained, experienced, service technician, licensed for the installation and servicing of oil burning equipment or otherwise qualified by the authorities having jurisdiction over the installation.

Printed in U.S.A. 999
Part No. 43-0270

Publication No. LD-40

Attachment "B"

TAPPINGS AND OPENINGS

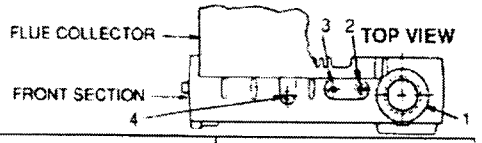

Tapping Location	Steam Boiler	Water Boiler
1	3" supply	1½" supply
1A	2" supply on rear section *	—
2	second ¼" siphon & pressure cutout if required	¾" air vent or expansion tank
3	¾" steam safety valve	¾" water relief valve
4	¼" siphon, pressure gauge & pressure cut-out	—
5A	—	½" tankless inlet
5B	—	½" tankless outlet
6	—	¼" pressure temp. gauge
7	—	½" high limit, hi/lo or combination control
8	¾" alternate electronic low water cut-off	
9	1½" skimmer tapping	—
10	½" low limit for tankless	—
11A	½" tankless inlet	—
11B	½" tankless outlet	—
12	½" steam gauge glass & 67 LWCO	—
13	1½" bushed to ¾" for drain cock	1½" return & ¾" drain cock
14	1½" condensate return	1½" alternate return
15	¾" NPT zone tapping	—

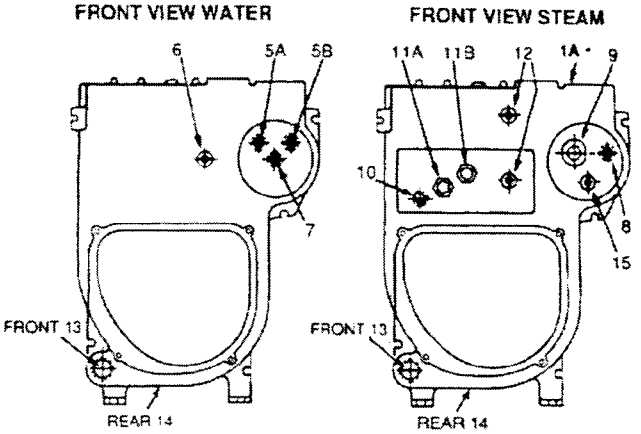

* Rear section LD-50, LD-60, LD-70 steam boilers only.

Figure 1

DIMENSIONS

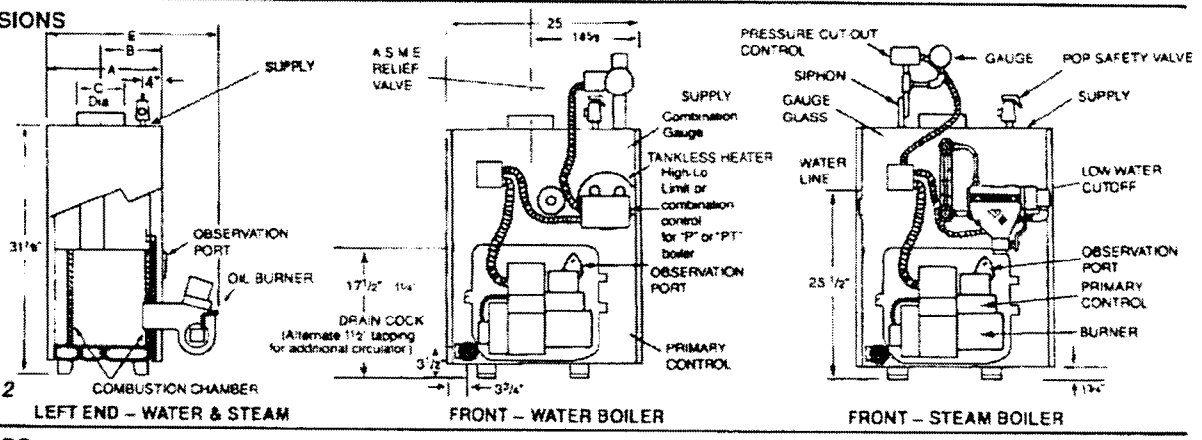

Figure 2

RATINGS

Boiler Model No.*	I=B=R Burner Capacity Oil Input		D.O.E. Heating Capacity MBH		I=B=R Net Ratings			I=B=R Chimney Size		A.F.U.E. %		Dimensions (inches)					Boiler Secl.	Tankless Heater GPM**	
	GPH †	BTUH	Water	Steam	Water MBH *	Steam MBH *	Steam Sq.Ft.	Nom. Rect. x Height § (In x in x ft)	I.D. Round x Height (in x ft)	Water	Steam	Boiler Length "A"	Front to Flue ℄ "B"	Flue Dia. "C"	Return Circulator Flange "D"	Overall Length "E"		Water	Steam
LD-20	0.75	105,000	90	—	79	—	—	8 x 8 x 15	5 x 15	83.50	—	11½	8 9/32	6⊔	1¼	24¼	2	2.20	—
LD-20BK	0.95	133,000	110	—	96	—	—	8 x 8 x 15	5 x 15	81.76	—	11½	8 9/32	6⊔	1¼	24¼	2	2.40	—
LD-30H	1.00	140,000	121	—	105	—	—	8 x 5 x 15	6 x 15	86.00	—	14⅞	10 1/32	6	1½	27⅝	3	3.10	—
LD-30¶	1.10 1.25	154,000 175,000	134 151	134 —	117 131	101 —	421 —	8 x 8 x 15 8 x 8 x 15	6 x 15 6 x 15	84.85 83.50	84.15 —	14⅞ 14⅞	10 1/32 10 7/32	6 6	1¼ 1¼	27⅝ 27⅝	3 3	3.20 3.40	3.00 —
LD-40H	1.50	210,000	182	179	158	134	558	8 x 8 x 15	7 x 15	86.00	84.00	18¼	11 23/32	7	1¼	31	4	3.80	3.40
LD-40¶	1.60 1.80	224,000 252,000	195 218	195 —	170 190	146 —	608 —	8 x 8 x 15 8 x 8 x 15	7 x 15 7 x 15	84.45 83.33	83.80 —	18¼ 18¼	11 23/32 11 23/32	7 7	1¼ 1¼	31 31	4 4	3.90 4.15	3.50 —
LD-50H	2.00	280,000	243	239	211	179	746	8 x 8 x 15	8 x 15	86.00	84.00	21⅝	13 13/32	8	1½	34⅜	5	4.30	3.90
LD-50¶	2.10 2.35	294,000 329,000	256 272‡	255 —	223 237	191 —	796 —	8 x 8 x 15 8 x 12 x 15	8 x 15 8 x 15	84.06 —	83.45 —	21⅝ 21⅝	13 13/32 13 13/32	8 8	1½ 1½	34⅜ 34⅜	5 5	4.40 4.70	4.00 —
LD-60¶	2.60 2.85	364,000 399,000	298‡ 327‡	298‡ —	259 284	224 —	933 —	8 x 12 x 15 8 x 12 x 15	10 x 15 10 x 15	— —	— —	25 25	15 3/32 15 3/32	8 8	1½ 1½	37¾ 37¾	6 6	4.90 5.20	4.50 —
LD-70¶	3.10 3.35	434,000 469,000	354‡ 381‡	354‡ —	306 331	266 —	1108 —	8 x 12 x 15 8 x 12 x 15	10 x 15 10 x 15	— —	— —	28⅜ 28⅜	16 25/32 16 25/32	9 9	— —	41⅛ 41⅛	7 7	5.45 5.70	5.00 —

Standard working pressure 30 psi water, 15 psi steam
All boilers hydrostatically tested — A.S.M.E.

* For forced hot water heating systems where the boiler and all piping are located within the area to be heated, the boiler may be selected on the basis of gross D.O.E. capacity output. The net I=B=R output ratings shown are based on an allowance for piping and pickup of 1.15 (water) or 1.33 (steam). D.O.E. capacity gross output is divided by the allowance to obtain net rating. The manufacturer should be consulted before selecting a boiler for unusual piping and pickup requirements such as intermittent system operation, extensive piping, etc.

† Ratings apply to the use of light oil at 140,000 Btu per gallon, and apply only when burner models listed on pages 14-16 of this manual are used, and are properly adjusted to produce 13% CO_2.

§ Nominal clay tile liner dimensions

** Tankless heater rating based on intermittent draw.

¶ Water boiler models LD-30 and larger have two firing rates. The boiler is factory shipped at the lower firing rate. To obtain the higher firing rate, refer to the Liberty II boiler installation instructions for the appropriate field adjustments.

‡ I.B.R. gross output

⊔ Collar is oblong, will fit 6" diameter nominal connector.

NOTE: All boilers under 300,000 Btuh input are tested and rated for capacity under the U.S. Department of Energy (D.O.E.) test procedures for boilers.

INSTALLATION REQUIREMENTS

BOILER LOCATION

Provide a level, solid foundation for the boiler. Location should be near the chimney so that the Flue Pipe Connector or Breeching to the chimney is short and direct.

A. The foundation must be capable of supporting the weight of the boiler when filled with water:

Boiler Size	Approximate Total Weight of Boiler Assembly, filled with water
LD-20	440
LD-30	550
LD-40	660
LD-50	785
LD-60	895
LD-70	1000

B. The Liberty II Boiler has full wet base sections which surround firebox for maximum heat absorption of burning fuel, and low floor temperature.

C. If boiler is to be located over buried conduit containing electric wires or telephone cables, consult local codes or the National Board of Fire Underwriters for specific requirements.

MINIMUM CLEARANCE

Provide accessibility clearance of 24" from surfaces requiring servicing (top and front) and 18" on any side requiring passage. The boiler shall be installed with the following MINIMUM clearances from combustible materials:

A. CHIMNEY CONNECTOR-18"

B. BACK AND SIDES- 6" EXCEPT as limited by 18" clearance from chimney connector

NOTE: Except in closets and alcoves, clearances above in (A) and (B) may be reduced by providing forms of protection as specified in NFPA 31, latest edition.

CHIMNEY REQUIREMENTS

A. The chimney must be constructed in accordance with all local applicable codes and the National Board of Fire Underwriters. See boiler models and rating table shown on page 2 for chimney sizes.

B. Check chimney condition.
Existing chimneys and stacks may have deteriorated; without repairs their use would be hazardous. Before connecting to an old chimney or stack:
1. Clean it.
2. Inspect it thoroughly.
3. Remove obstructions.
4. Replace worn sections of metal stacks.
5. Seal bad masonry joints.
6. Repair damaged linings.

C. Where more than one appliance vents into a common chimney, the area of the common breeching should at least equal the area of the largest appliance flue plus 50% of the additional flue areas.

D. Breeching area must not be reduced at connection into chimney. Breeching must be inserted into, but not beyond, inside of chimney liner.

E. Chimney height shall extend at least 3 feet above where it passes through the roof of the building, and at least 2 feet above any ridge within 10 feet of the chimney.

F. The use of a vent cap, where permitted by code, gives additional protection against adverse wind conditions and precipitation.

G. Flue Connection: Connect flue pipe between top of boiler and chimney. Horizontal sections of flue pipe must be pitched upward to the chimney at least 1/4" per foot. Flue must be inserted into, but not extend beyond, the inside wall of the chimney flue. Install draft regulator in flue pipe, as shown in figure 3.

AIR SUPPLY AND VENTILATION (see NFPA 31, latest edition)

Sufficient air for combustion and ventilation in the boiler room must be provided. Failure to do this will result in poor combustion, heavy sooting and health hazards.

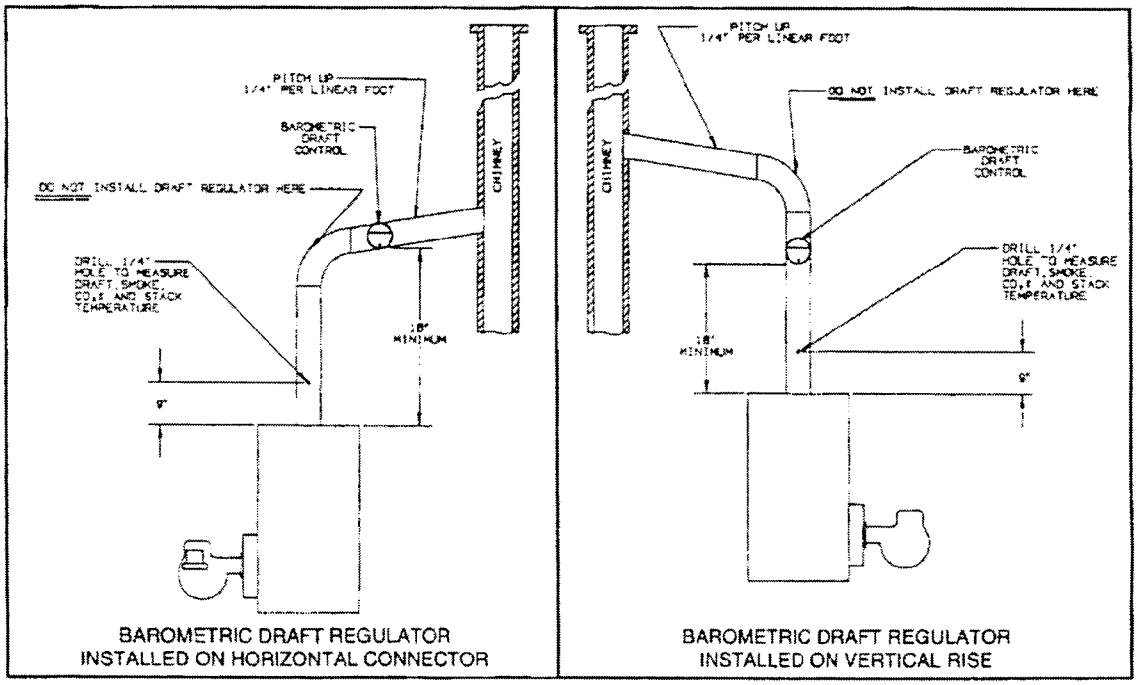

Figure 3. Barometric Draft Regulator

Any oil-fired boiler must have a steady draft* and an ample supply of combustion air at all times during firing. If air supply or chimney draft* is unreliable, CO_2 and overfire draft* will change unpredictably.

DO NOT vent this boiler to the same chimney flue used by a fireplace or coal or wood burning furnace or boiler. The draft* produced by solid fueled devices varies tremendously between high fire and low fire.

In modern, weather stripped, energy-saving buildings or older buildings which have been modified similarly, natural infiltration may not supply enough air for combustion, particularly if other fuel burning appliances, exhaust fans or draft inducers are competing for the same air supply. Fireplaces, other solid fuel burning appliances and exhaust fans consume great quantities of air; if air supply is not ample, such an appliance will create a downdraft in the oil-fired boiler flue. This can create a hazardous condition. Flue gases can be sucked out of the chimney through the vent regulator into the living space. DO NOT operate this boiler and a solid fuel burning appliance at the same time, unless the solid fuel burner is provided with its own outside air supply.

See Table 2, "Provisions for Combustion and Ventilation Air Supply" for determining need and method of providing air for combustion and ventilation.

If fly screen must be used over air supply openings, areas calculated should be doubled; the screen should be inspected and cleaned frequently to maintain free air flow.

Protect air openings against closure by snow, debris, etc. Openings such as doors or windows, if used, must be locked open.

* Draft is negative or suction pressure

TABLE 2: Provisions for Combustion and Ventilation Air Supply. See NFPA 31, latest edition for more detailed information.

	Boiler Location	Air Supply	Action Required
2.1	Unconfined space	Is there sufficient air for combustion by natural infiltration (see NOTE (1), "Test..." below)?	NONE
2.2	Unconfined space	If there is NOT sufficient air for combustion by natural infiltration due to tight construction or other conditions, then it REQUIRES AIR FROM OUTDOORS. SEE "ACTION REQUIRED" column at right. See Notes (1) and (2) below.	Provide air from outdoors directly through a permanent outside wall opening or openings with a free open area of not less than 1 sq. in. per 4000 Btu/hr of TOTAL input of ALL fuel burning appliances in the building. See Note (1) and (3).
2.3	Confined space	If there is sufficient air for combustion from within building but it comes from outside of the confined space. SEE "ACTION REQUIRED" column at right. See Note (1) below.	The confined space shall be provided with two permanent air openings, one near the top of the enclosure and one near the bottom. EACH opening shall have a free air opening of not less than 1 sq. in. per 1000 Btu/hr. of TOTAL input of ALL fuel burning appliances within the enclosure. The two openings shall freely communicate with the interior areas of the building which in turn would have to have adequate infiltration of air from outdoors. See Notes (1, 3) and Figure 3a.
2.4	Confined space	If there is NOT sufficient air for combustion due to tight construction or other conditions it REQUIRES AIR FROM OUTDOORS. SEE "ACTION REQUIRED" column at right. See NOTE (2) below.	(a) Air from the outdoors shall be provided to the confined space by two permanent openings, one in or near the top of the enclosure space and one in or near the bottom. The openings shall communicate directly, or by means of ducts, with outdoors or to such spaces (crawl or attic) that freely communicate with outdoors (See figures 3b, 3c and 3d). (b) Where directly communicating with outdoors or by means of vertical ducts, each opening shall have a free area of not less than 1 sq. in. per 4,000 Btu/hr. (35 sq. in. per gal. per hr.) of TOTAL input rating of ALL appliances in the enclosure. If horizontal ducts are used, each opening shall have a free area of not less than 1 sq. in. per 2,000 Btu/hr. (70 sq. in. per gal. per hr.) of TOTAL input of ALL appliances in the confined space. See Figures 3b, 3c and 3d.

(1) Test for sufficient air for combustion by infiltration by running this boiler for 30 minutes under all of the following conditions and at the same time: a) all doors, windows and other like openings must be closed, b) all fuel burning appliances should be FIRING, c) all exhaust fans and clothes dryers turned ON. At the above conditions the CO_2, smoke and draft readings must be normal. (CO_2 between 11% and 13%, smoke between ZERO and a TRACE, draft between .02" W.C. and .04" W.C. negative pressure.)

(2) Aside from tight construction, some of the conditions that steal air for combustion from a boiler are other fuel burning appliances, exhaust fans and clothes dryers.

(3) Generally, louvers made of wood have a free open area of 20% and those made of metal have a 60% to 70% free open area. Screens also reduce the open area of the louvers.

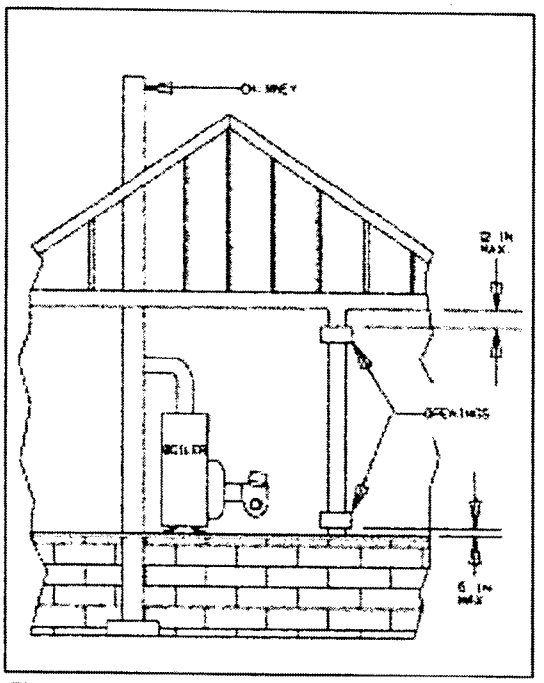

Figure 3a.
Appliances located in confined spaces. Air from inside the building. See Table 2 (2.3).

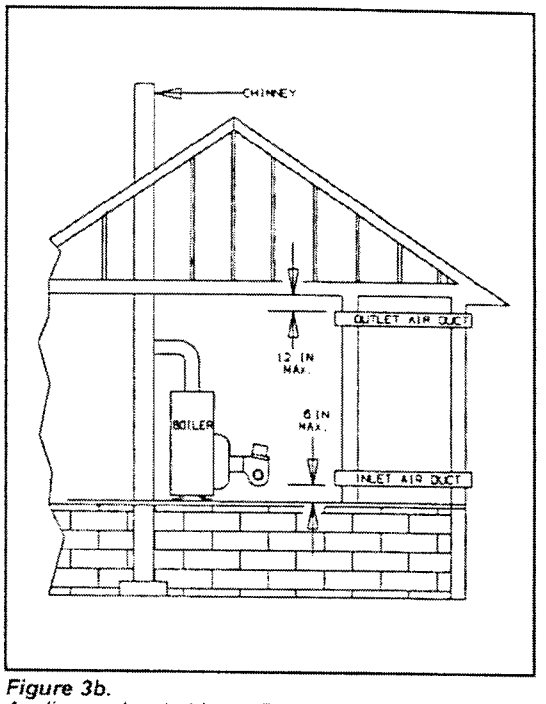

Figure 3b.
Appliances located in confined spaces. Air from outdoors. See Table 2 (2.4).

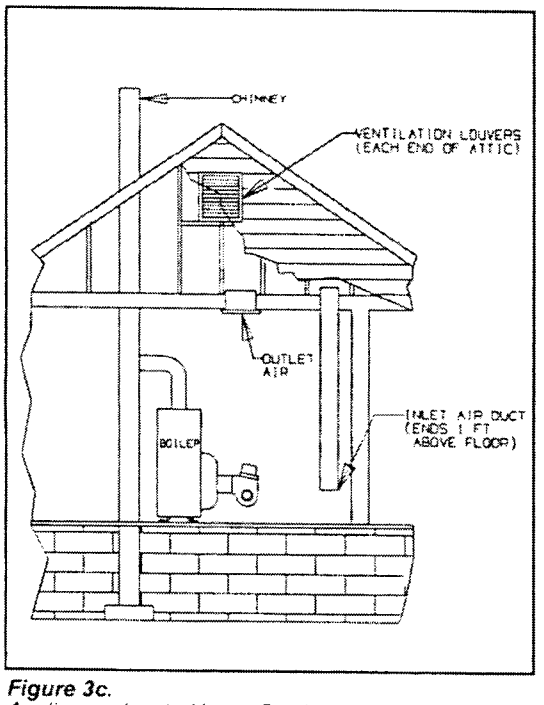

Figure 3c.
Appliances located in confined spaces. Air from outdoors through ventilated attic. See Table 2 (2.4).

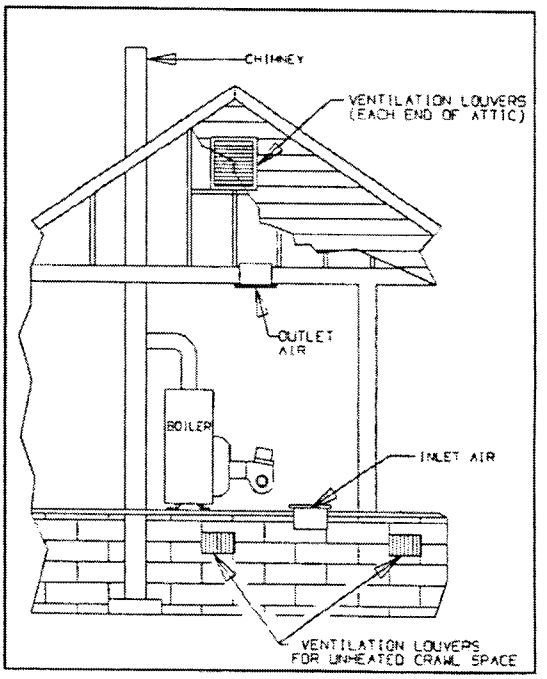

Figure 3d.
Appliances located in confined spaces. All air from outdoors through ventilated crawl space and outlet air to ventilated attic. See Table 2 (2.4).

INSTALLING CONTROLS AND ACCESSORIES ON BOILER UNITS

Notes: Jacket must be installed on boiler units prior to installation of trim.

I. STEAM BOILER TRIM, see page 2 for tapping locations, and figure 4 for illustration of steam boiler.
   A. Steam pressure gauge and pressure cut-out, install in tapping no. 4, figure 4.
   B. Gauge glass set — use tapping no. 12.
   C. Pop safety valve — use tapping no. 3, piped full size to boiler; or pipe full size into a valveless steam header.
   D. Combustion safety control — mounted on burner.

II. WATER BOILER TRIM, see page 2 for tapping locations, and figures 1 and 2 for illustration of water boiler.
   A. Pressure- temperature - altitude gauge — use tapping no. 6
   B. High temperature limit — use tapping no. 7.
   C. Operating control (if used) — use tapping no. 7.
   D. Water relief valve — use tapping no. 3, piped full size to boiler.
   E. Automatic air vent or compression tank tappings — if used, install in tapping no. 2.
   F. Combustion safety control — mounted on burner.

PIPING

IMPORTANT: Boilers are to be used with closed system. Any application that uses steam or water from system, causes the introduction of a frequent supply of fresh water into the boiler. This will cause damage to the boiler. Use of heat exchangers will prevent this damage.

PIPING FOR STEAM BOILERS

Provide Header and Hartford Loop as suggested. See figures 4 and 5. Local codes apply.

CLEANING PIPING SYSTEM

A. To clean piping system, open all valves at the heating elements. After getting up a good head of steam, shut the boiler down and allow the condensate to return to the boiler. The condensate will carry the oil film with it. Again blow-off the boiler. On extremely fouled systems, it may require several visits over a few days to clean the system.
B. When steam only (no water) is released through the hand valve, the boiler will not surge or flood.

PIPING FOR WATER UNITS

NOTE: On knocked-down boiler only, jacket may be installed after supply and return piping connection, but must be installed prior to adding trim.

I. CIRCULATING SYSTEM
   A. FORCED CIRCULATION hot water heating system: Use the top tapping as supply tapping, and use the front or rear bottom tappings for the return.
   B. A FLOW CONTROL VALVE (See figure 6) will prevent gravity circulation and usually is required when tankless heater is installed.

II. AIR CONTROL SYSTEMS
   A. DIAPHRAGM-TYPE COMPRESSION TANKS are used to control system pressure in an AIR ELIMINATING SYSTEM: an automatic air vent is used to REMOVE air from the system water. See figure 6. If system pressure needs further control, add an additional tank or install a larger capacity tank. The automatic air vent should be installed in the top of the boiler, as in figure 6.
   B. CONVENTIONAL COMPRESSION TANKS (non-diaphragm type) are used to control system pressure in an AIR COLLECTING SYSTEM. Within the system, after initial start-up and venting, air is collected in the tank and acts in contact with the water to control pressure. Air is not vented from this system.
   If system pressure needs further control, add another tank in parallel with the original tank or install a large capacity tank. Locate the tank at the inlet end of the pump near the boiler. (See figure 7)

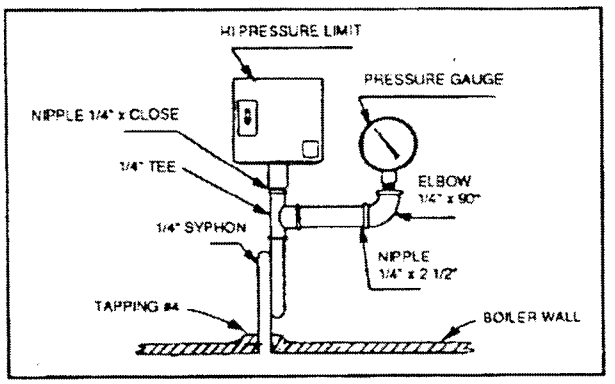

Figure 4.

Boiler Size	A Dim.
LD-50	15 27/32
LD-60	19 7/32
LD-70	22 19/32

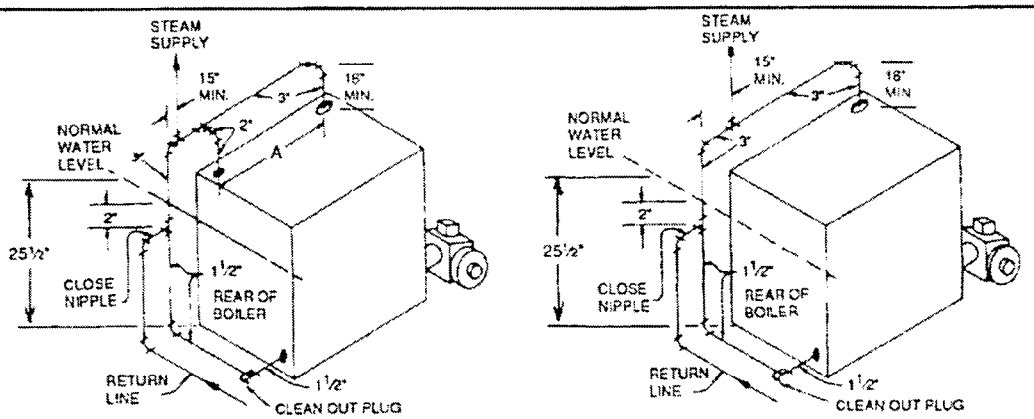

Models LD-50 through LD-70 **Models LD-30 through LD-40**

Figure 5. Recommended Steam Piping at Boiler

C. HOT WATER RADIATION VENTING - Manual air vents should be installed at the top of all "drops"(where piping goes downward). Air must be vented or purged from all zone lines to permit proper system heating.

D. PUMP LOCATION-Locating low-head pump(s) on return to boiler is only acceptable in residences of one or two stories. (See figure 6) The pump location shown in figure 7 is required in large, multi-story building installations, especially when high-head pumps are used and is also recommended for all applications.

E. A conventional compression tank may be connected to the 3/4" tapping as shown in figure 7.

IMPORTANT: Hot water heating systems containing high water volume, such as would occur with cast-iron radiation, require special care with air elimination. The circulator pump should be located on the boiler supply pipe and the expansion tank and air scoop should be located near the pump suction. (See Figure 6, Alternate Pump Location.)

PIPING TANKLESS HEATER (if used)

I. Heater capacities are listed on Page 2.

II. Pipe the built-in tankless heater using the inlet and outlet tappings indicated on the heater (figure 8).

A. Tempering valve (illustrated, but not furnished) is suggested to provide more volume of temperate water to kitchen and bath.

B. High temperature water, for dishwasher and laundry, may be piped direct.

C. A flow control valve should be used to control the rate of flow of water through the coil, otherwise the heating capacity of the coil will be exceeded. To insure sufficient hot water, the flow rate through the coil should be limited to a maximum shown for intermittent draw in the ratings table on page 2.

INSTALLING THE BURNER

See Burner Data, pages 14-18, and Burner Manual supplied with burner. If burner is not mounted as received, mount to boiler, placing flange over mounting studs. Use gasket between flange and boiler. Distance between flange and nose of burner must be as shown on pages 14-18. Check to see that nozzle and settings are as given in burner data tables, pages 14-18.

OIL SUPPLY PIPING

Install the oil tank or tanks and piping from tank to burner. Follow local codes and practices, NFPA No. 31, INSTALLATION OF OIL BURNING EQUIPMENT and the instruction sheet attached to the oil burner pump. A one-pipe system should be used for gravity-fed fuel systems and for lift systems, where the total lift is less than 8 feet. Where the total lift is greater than 8 feet, a two-pipe system must be used. In some instances, local codes may require a two-pipe system for below grade fuel oil tanks. Be sure to set-up the fuel oil pump for the piping system used; follow the instructions attached to the pump. Be sure to include a good quality, low pressure drop fuel oil filter in the supply line from the tank. This is necessary, especially at low fuel oil flow rates (small nozzle sizes), to prevent nozzle plugging. See Slant/Fin publication on one-pipe and two-pipe fuel oil systems.

WIRING THE BOILER

A. The wiring diagrams for the burner and boiler may be found on pages 11-13.

B. 24 volt control wiring should be approved Safety Circuit wire, protected as needed.

C. Power supply wiring to the burner must be 14 gauge or heavier, as required, and should have a properly fused disconnect switch. 120 volt wiring to pumps and safety controls must also be 14 gauge or heavier. Wire must be enclosed in approved conduit.

D. All wiring must be installed in compliance with the National Electric Code, or any local or insurance codes having jurisdiction.

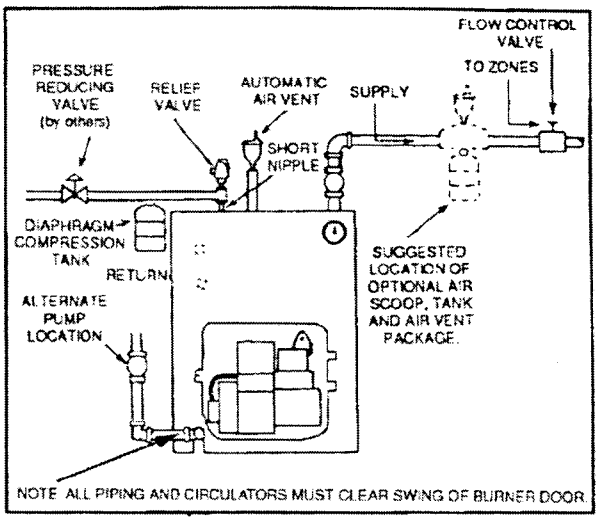

Figure 6. Air Eliminating System

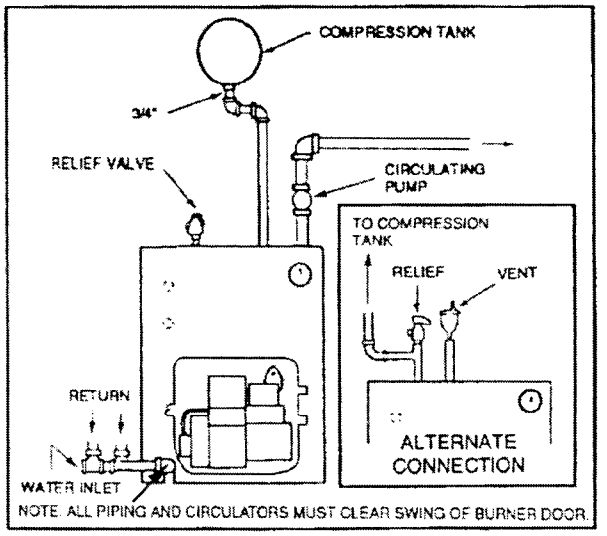

Figure 7. Air Collecting System

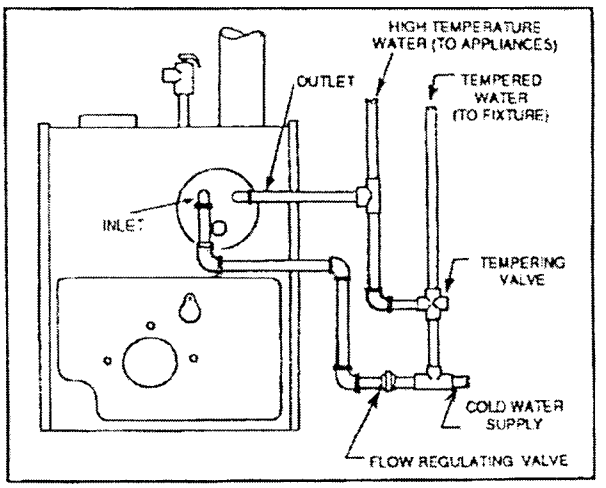

Figure 8. Recommended Piping to Tankless Heater

VENT PIPING AND DRAFT REGULATOR

A. Vent pipes must be installed having the same diameter as the boiler outlet. (See page 2)
B. Vent pipes and breeching must be pitched upward a minimum of 1/4" per foot.
C. Connect vent pipe to the chimney using as few elbows as possible.
D. Horizontal vent connector into the chimney should not be inserted beyond the inside wall of the chimney.
E. Install barometric draft regulator on horizontal breeching, near chimney, with hinge horizontal and face vertical. See manufacturer's instructions packed in carton with barometric draft regulator.
F. If two or more appliances are used on the same chimney, see CHIMNEY, page 3.
G. Make up all joints with minimum air leaks, secure with sheet metal screws.

OPERATING INSTRUCTIONS

PRECAUTIONS BEFORE STARTING OIL BURNER

Make a positive check of A through F before starting burner:

A. Boiler and system are full of water. All air is vented from system. See below.
B. All wiring is completed. See pages 11-13.
C. Oil supply is connected to the burner; nozzle is installed correctly; oil valve is open at tank.
D. Smokepipe is connected to chimney.
E. All combustible materials are cleared away.
F. Combustion air supply is provided. See page 3.
G. Burner settings are adjusted as per pages 14-18 and as shown on boiler jacket.
H. Main cast-iron door on which burner is mounted is bolted shut and fiberglass rope seal is making good contact.

WARNING: NEVER OPERATE any natural draft* boiler (Liberty II boiler is a natural draft boiler) with zero draft or overfire pressure: early failure of the burner, nozzle and chamber is inevitable if you do. Use a draft gauge, and make sure that overfire draft* is .02", minimum, during all operating conditions.

* Draft is negative or suction pressure.

START-UP (COMBUSTION TEST INSTRUMENTS MUST BE USED)

A. Make sure the boiler is installed and wired properly and is full of water.
B. Open the observation door (on the front, above the burner).
C. Start the oil burner (see burner instructions for bleeding air from oil, etc.). IMMEDIATELY, set burner air bands to obtain a bright fire without smoke or oil stain. Set the DRAFT REGULATOR to obtain .02" overfire draft*. Take draft reading through slot in observation door.
D. Close the observation door. Allow the burner to fire for at least one hour total firing time, to bake out the volatile binders in the combustion chamber before taking final combustion readings.
E. By alternate adjustment of the barometric draft regulator, the burner air regulation and head regulation devices (whichever apply), set for a trace of smoke and as close to 13% CO_2 as you can. Then open the air bands or shutter (whichever apply) an additional 1/8". This should result in zero smoke with NO raw oil on the smoke paper and a smooth light-off. DO NOT ATTEMPT TO SET FIRE BY EYE.
Flame retention burners may appear efficient and smoke free from an inefficient 7% up to an overly high 14% CO_2. However, a very low CO_2 can also result in poor ignition and raw (unburned) oil entering the fire box. At very high CO_2, any slight decrease in air flow for any reason will cause incomplete combustion, with high smoke and dry soot formation in the fire box.
F. If smoke reading is satisfactory, but CO_2 can not be increased to a satisfactory level (12% or better) or overfire draft of 0.02" W.C. can not be obtained, check for proper sealing between sections, between burner mounting plate and front section, around burner blast tube and around flue collector and collar. If seal is not satisfactory, reseal with furnace putty or silicone with a temperature rating of at least 400° F. (All safety precautions indicated on material package must be followed.)
G. Once burner and draft have been set up, then smoke, CO_2 and stack temperature should be checked and recorded. If smoke is greater than trace, review the burner instructions: replace the nozzle if necessary. Normal smoke to be expected at approximately 13% CO_2 is zero to a trace.

CLEANING AND FILLING A NEW WATER BOILER

I. BEFORE FILLING WATER BOILER
   A. Check burner to be certain it is ready for firing. DO NOT FIRE into an empty boiler.
   B. Be prepared to heat raw water to at least 180°F. as soon as it is introduced into the boiler. This procedure will remove dissolved, corrosive gases.
   C. Provide drain line, with valve, from boiler. Use a bottom tapping. Line and drain must be suitable for handling caustic solution.

II. CLEANING WATER BOILER SYSTEM
   A. Prepare a boil-out solution of *sodium hydroxide* (caustic soda) or *tri-sodium phosphate*.
   NOTE: Use caution in handling chemicals. Caustic soda is harmful to skin, eyes and clothing.
      1. Proportions: 1 lb. of either chemical per 50 gallons of system water.
      2. Stir chemical in water until dissolved and pour into the boiler through a top tapping. Replace plug.
   B. Fill the entire system with water.
   C. Start the burner, using the start-up procedure.
   D. Circulate the water through the entire system.
   E. Vent the system, including the radiation.
   F. Allow boiler water to reach operating temperature, if possible.
   G. Continue to circulate the water for a few hours.
   H. Shut off the burner
   I. With CAUTION, drain the boiler solution to a safe location. DO NOT LEAVE SOLUTION SITTING IN SYSTEM OVER 2 HOURS.
   J. Wash the water side of the boiler thoroughly using a high pressure water stream. Fill and drain the boiler several times.

III. TREATING WATER FOR CORROSION CONTROL
(This is not scale control)
   A. Prepare a solution of *sodium chromate*.
   Proportions: 6 oz. per 50 gallons of system water.
   B. Stir chemical into water until dissolved and pour into the boiler through a top tapping. Replace plug.

IV. FILLING AND VENTING THE WATER BOILER
   A. Refill the system with fresh water.
   B. Bring water temperature to at least 180° F. promptly.

WATER CONTENT OF BOILER (GALLONS) *						
	LD-20	LD-30	LD-40	LD-50	LD-60	LD-70
Water Boiler	8.3	10.7	13.1	15.5	17.8	20.2
Steam Boiler	—	6.9	8.8	10.7	12.6	14.5

* Without tankless coil

VOLUME OF WATER IN STANDARD PIPE OR TUBE

Nominal Pipe Size Inches	Standard Steel Pipe			Type L Copper Tube	
	Schedule No.	Inside Diameter Inches	Gallons per Lin. Ft.	Inside Dia. Inches	Gallons per Lin. ft..
3/8	—	—	—	0.430	0.0075
1/2	40	0.622	0.0157	0.545	0.0121
5/8	—	—	—	0.666	0.0181
3/4	40	0.824	0.0277	0.785	0.0251
1	40	1.049	0.0449	1.025	0.0429
1 1/4	40	1.380	0.0779	1.265	0.0653
1 1/2	40	1.610	0.106	1.505	0.0924
2	40	2.067	0.174	1.985	0.161
2 1/2	40	2.469	0.249	2.465	0.248
3	40	3.068	0.384	2.945	0.354

G. Circulate water through entire system.
D. Vent the system, including the radiation.
E. The boiler is now ready to be put into service or on standby.
F. If brand-name air-control devices are used, venting instructions furnished with the devices should be followed.

V. SAFETY CHECK FOR CONTROL SYSTEM
High limit control test: Set thermostat high enough for boiler water temperature to reach high limit control setting. When this temperature is reached, the high limit switch should open, and the burner should shut off automatically. If the high limit does not operate to shut off the burner, the high limit or the wiring is faulty. Repair or replace immediately.

CLEANING AND FILLING A NEW STEAM BOILER

I. BEFORE USING STEAM BOILER
A. Check burner to be certain it is ready for firing. DO NOT FIRE into an empty boiler.
B. Be prepared to heat raw water to at least 180°F. as soon as it is introduced into the boiler. This procedure will remove dissolved, corrosive gases.
C. Provide drain line, with valve, from boiler. Use a bottom tapping. Line and drain must be suitable for handling caustic solution.
D. Check for low water cut-off operation, see section below for check-out.

II. CLEAN STEAM BOILER SYSTEM.
A. Fill the boiler to water line indicated on the boiler.
B. Follow start-up procedure for burner and operate the boiler with steam in the entire system for 2 or 3 days to bring oil and dirt from the system to the boiler. While system is in operation, maintain the proper water level in the boiler by slowly adding water to the boiler.
C. Shut down burner, cool down boiler and drain system.
D. Procedure to dissolve oil and grease in boiler:
1. Fill boiler to proper water line.
2. Prepare a boil-out solution of *sodium hydroxide* (caustic soda) and *tri-sodium phosphate*:
NOTE: Use caution in handling chemicals. Caustic soda is harmful to skin, eyes and clothing.
(a) Proportions: 1 lb. of each chemical per 50 gallons of system water.
(b) Stir chemicals into water until dissolved and pour into the boiler through a top tapping. Replace plug.
3. Start the burner; boil the water for at least 5 hours; shut off the burner.
E. With CAUTION, drain the boiler solution to a safe location. DO NOT LEAVE SOLUTION SITTING IN SYSTEM OVER 2 HOURS.
F. Wash the water side of the boiler thoroughly using a high pressure water stream. Fill and drain the boiler several times.

III. TREATING WATER FOR CORROSION CONTROL
(This is not scale control)
A. Prepare a solution of *sodium chromate*.
Proportions: 1 lb. per 50 gallons of boiler water.
B. Stir chemical in water until dissolved and pour into boiler through a top tapping. Replace plug.

IV. FILLING AND VENTING THE STEAM BOILER
A. Refill the boiler to the indicated water line.
B. Bring water to boiling temperature, promptly.
C. The boiler is now ready to be put into service or on standby.

BLOWING OFF A LOW PRESSURE STEAM BOILER

A. A 1-1/2" NPT tapping is provided in the front of the boiler (tapping no. 9, figure 1) for use as a surface blow down to provide rapid skimming of oil and grease which accumulate on the surface of the water. The boiler should be blown down as outlined below.
B. Turn off electrical power supply to boiler. Allow boiler to cool down and steam pressure to reduce to zero before removing skimmer tapping plug. Check for steam pressure by testing the pop safety valve. Keep your hands and all parts of your body away from the discharge end of the safety valve. Drain boiler down one to two inches below skimmer tapping. The water might be hot. Remove skimmer plug slowly and carefully install a 150 psi malleable iron 1-1/2" NPT street elbow, a 1-1/2" NPT skimmer valve and length of pipe and place a bucket underneath the open end of the pipe. Cover bucket with a piece of cloth. (See figure 9)
C. Fill boiler slowly until water level is two inches from top of gauge glass. (This is the starting water level for skimming only.) Fire boiler to produce steam. If the system is heavily laden with oil, it may be difficult to obtain much more than a pound or so of pressure. Set the pressure control at about 7 psi. The higher the steam pressure you can use, the better and faster the cleaning.
D. As steam develops, open the SKIMMER drain valve with caution to skim the oil and film from the top of the water. DO NOT open the boiler drain valve. Close the skimmer drain valve when the water level drops to about 5" from the top of the gauge glass. The water may stop before the level drops to 5" below the top of the glass. Refill boiler until water level is again two inches from the top of the gauge glass.
E. Repeat (D) above until all film is skimmed off and the water settles to a normal movement. Add make up fresh water to the boiler as described in (D) above, during the blow-off operation, to maintain the proper skimming water level in the vessel. Empty bucket frequently in order to see the difference in water cleanliness.
F. When surging has stopped and water is clean, and no film can be seen floating in the bucket, shut off boiler, drain down to level of skimmer tapping, remove valve, plug skimmer tapping and refill the boiler to 24-1/2" water level. After 15 minute operation, readjust level to normal operating level of 25-1/2" from bottom of boiler (see figure 9). Check the pop safety valve for proper operation. Check the low water cut-off operation, see below.
G. The entire process may have to be repeated over a period of a few days on extremely fouled systems.

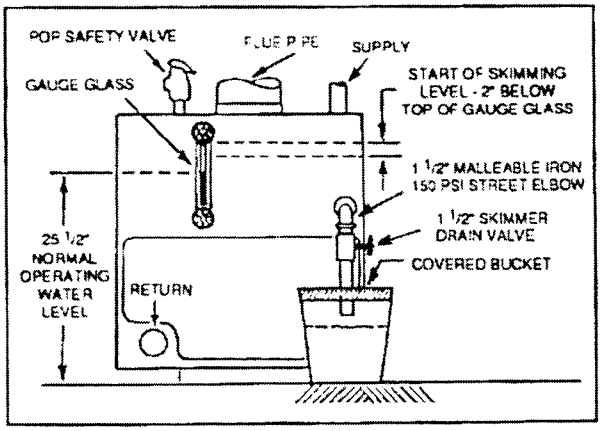

Figure 9.

LOW WATER CUT-OFF CHECK-OUT

I. Electronic probe type low water cut-off
If this boiler is factory equipped with an electronic probe type low water cut-off, operation of cut-off should be checked at least twice a year as follows:
A. While boiler is running, drain down boiler water slowly through Boiler Drain Cock shown on page 4, just until light goes on. Boiler should shut down 10 seconds after light goes on.
B. Be sure that it is the low water cut-off and not the room thermostat, pressure cut-out, or other control that has shut off the burner.
C. Refill the boiler and repeat test.
D. Refill the boiler and reset controls for normal operation.

II. Float type low water cut-off
If this boiler is factory equipped with a McDonnell & Miller float type low water cut-off, the low water cut-off must be blown down (flushed), at least once a week.

CAUTION: When flushing float type low water cut-off control, hot water and steam will flow out the blow down valve. Blow down valve is illustrated below.

A. SPECIAL FLUSHING INSTRUCTIONS
For new boiler installed in old system.
Installation of new boiler may break loose a heavy accumulation of sediment and scale from old piping and radiators. It is extremely important to blow down your McDonnell cut-off more frequently the first week.
First week — 3 times
Thereafter — at least once a week.

B. As boiler water circulates through the float chamber, dirt or other sediment may be deposited. This chamber is extra deep. But the only sure way to keep any accumulation from interfering with float action is to "blow down", or flush out, the control once a week. Do it while boiler is in operation. First note water level in gauge glass. Open blow-off valve at bottom of control; water will pour out, flushing away sediment. Drain until water is clear — about a pail —then close valve. If level in gauge glass has dropped, add water to boiler to restore level.

C. NOTE: Opening blow-off valve checks cut-off operation too. As float drops with falling water level, burner will stop. After burner is off and normal operating conditions restored, burner will resume firing.

D. Be sure that it is the low water cut-off and not the room thermostat, pressure cut-out, or other control that has shut off the burner.

PRESSURE CONTROL CHECK-OUT

A. Check burner to be certain it is ready for firing. DO NOT FIRE into an empty boiler.

B. Set thermostat high enough for boiler to make steam. Set the pressure control down to its lowest setting. As the boiler starts to produce steam, the steam pressure will start to build. The burner will shut off when the steam pressure exceeds the pressure setting (plus differential if control has this feature).

C. Adjust the pressure control to a higher setting. The higher setting should be above the steam pressure in the boiler. This should turn the burner back on.

D. Reset the pressure control as needed for the system. The pressure control should be checked at least twice a year.

REPLACEMENT OF STEAM BOILERS

Anytime an older steam boiler is removed from the heating system and replaced with a new boiler, there are certain conditions that have to be examined on the heating system.

A. Steam systems have a tendency to develop scale inside the wet return lines and the boiler. The older the system the greater the accumulation of scale that can exist inside the piping. Therefore, it is necessary when replacing a steam boiler to check the piping for blockage or restrictions. Clean or replace the piping as required. (See special flushing instructions on this page.)

B. Replace all buried wet return lines.

C. All equipment (air vents, radiation equipment, etc.) in the steam heating system should be checked for proper operation. All piping should be checked for proper pitch.

D. It is good engineering practice to repack or tighten the packing nuts on all valves in the heating system.

STEAM CONTROL ASSEMBLY

Installed McDonnell & Miller 67 low water cut-off and water level gauge.

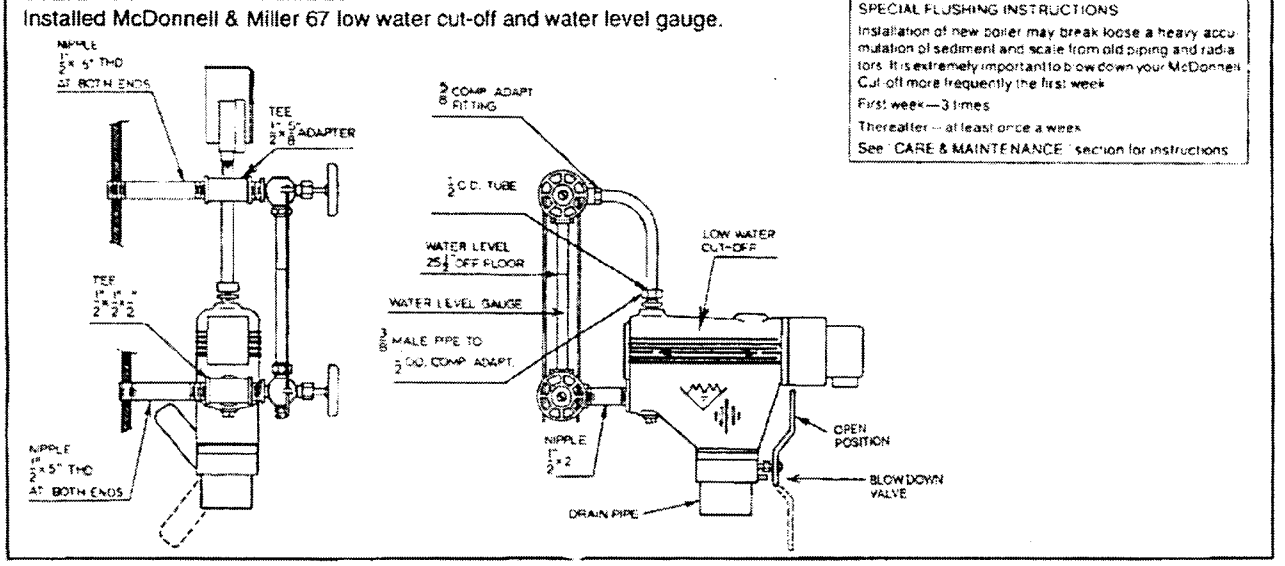

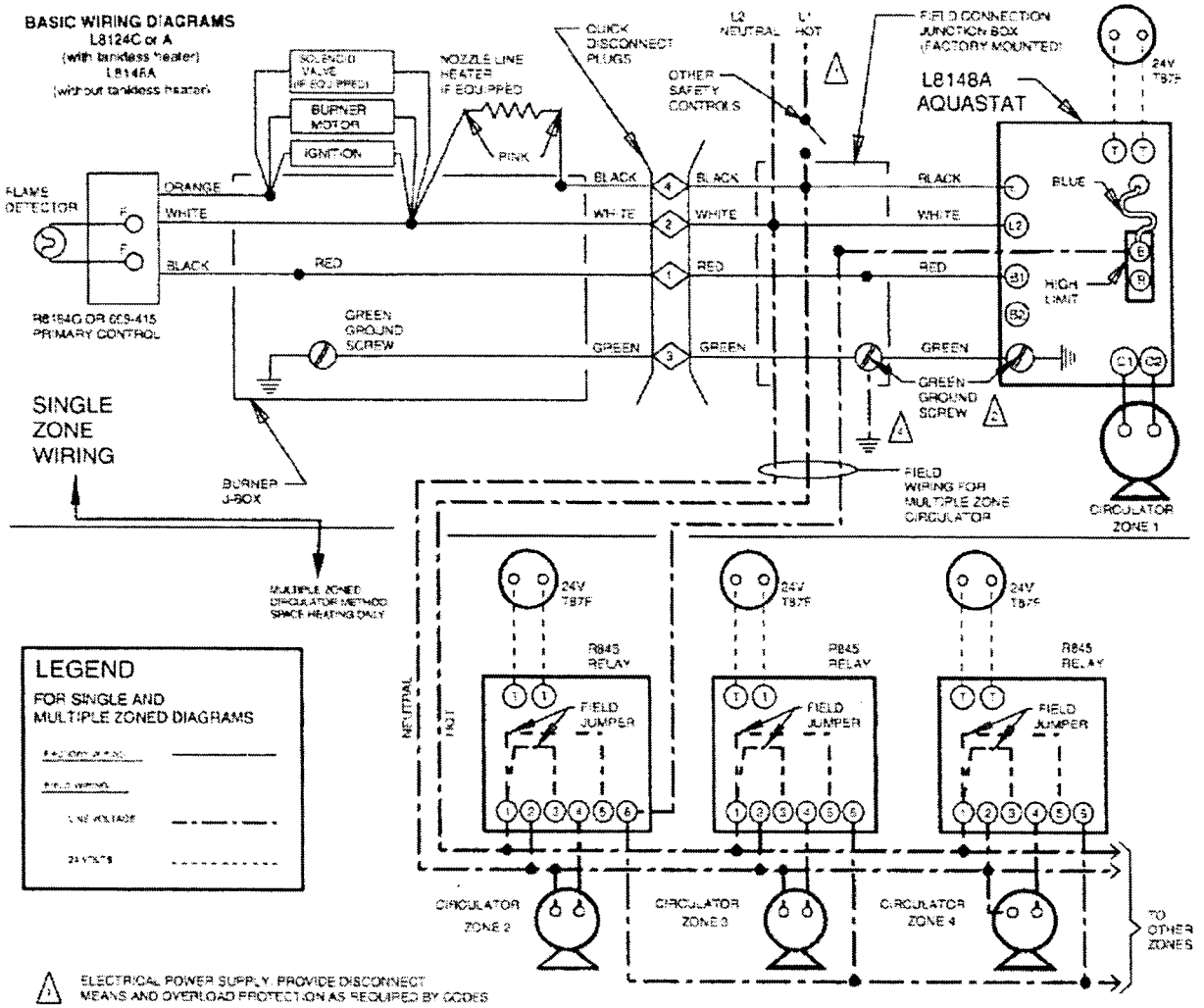

1. ELECTRICAL POWER SUPPLY. PROVIDE DISCONNECT MEANS AND OVERLOAD PROTECTION AS REQUIRED BY CODES
2. CONTROL CASE MUST BE CONNECTED TO EARTH GROUND USE GROUNDING SCREW PROVIDED
3. 8 1/4 IN AB TERMINAL
4. GROUNDING CONDUCTOR TWO GREEN GROUND WIRES ARE FACTORY CONNECTED TO THE GREEN GROUND SCREW IN THIS BOX. FIELD WIRE A GROUNDED CONDUCTOR TO THIS SCREW TOGETHER WITH THE TWO GREEN FACTORY CONNECTED GREEN GROUND WIRES.

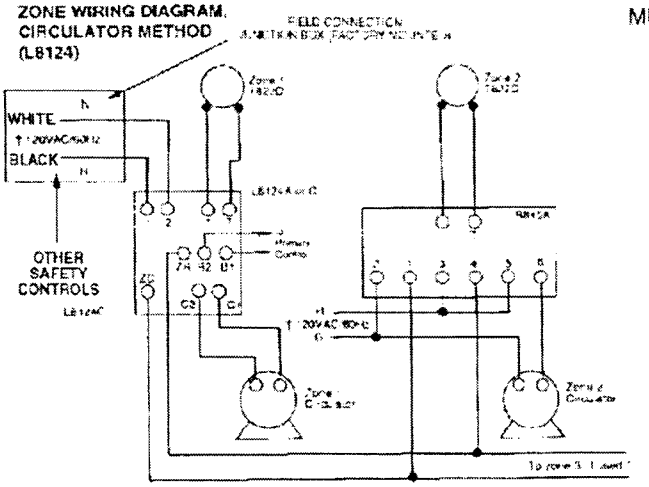

* Note: Total circulator load not to exceed 8 amp full load for circuits shown

MULTIPLE ZONED, ZONE VALVE METHOD

USING HONEYWELL V8043F OR ERIE 765

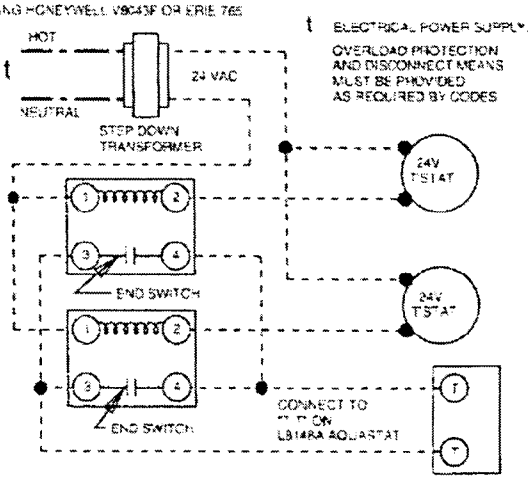

BASIC MODULE WIRING (less circulator)

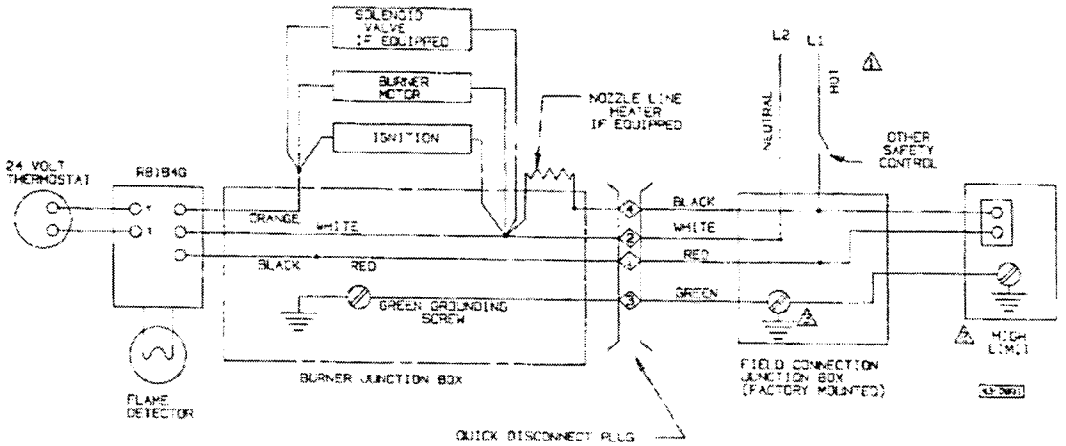

⚠ ELECTRICAL POWER SUPPLY. PROVIDE DISCONNECT MEANS AND OVERLOAD PROTECTION AS REQUIRED BY CODES

⚠ CONTROL CASE MUST BE CONNECTED TO EARTH GROUND USE GROUNDING SCREW PROVIDED.

⚠ GROUNDING CONDUCTOR: TWO GREEN GROUND WIRES ARE FACTORY CONNECTED TO THE GREEN GROUND SCREW IN THIS BOX. FIELD WIRE A GROUNDED CONDUCTOR TO THIS SCREW TOGETHER WITH THE TWO GREEN FACTORY CONNECTED GREEN WIRES.

WIRING FOR PACKAGED STEAM BOILER EQUIPPED WITH MC DONNELL NO. 67 L.W.C. O.

High Pressure Limit
Recommended setting 0.5 PSI
Differential 5 PSI

Low Limit (tankless model only)
recommended setting 160°F

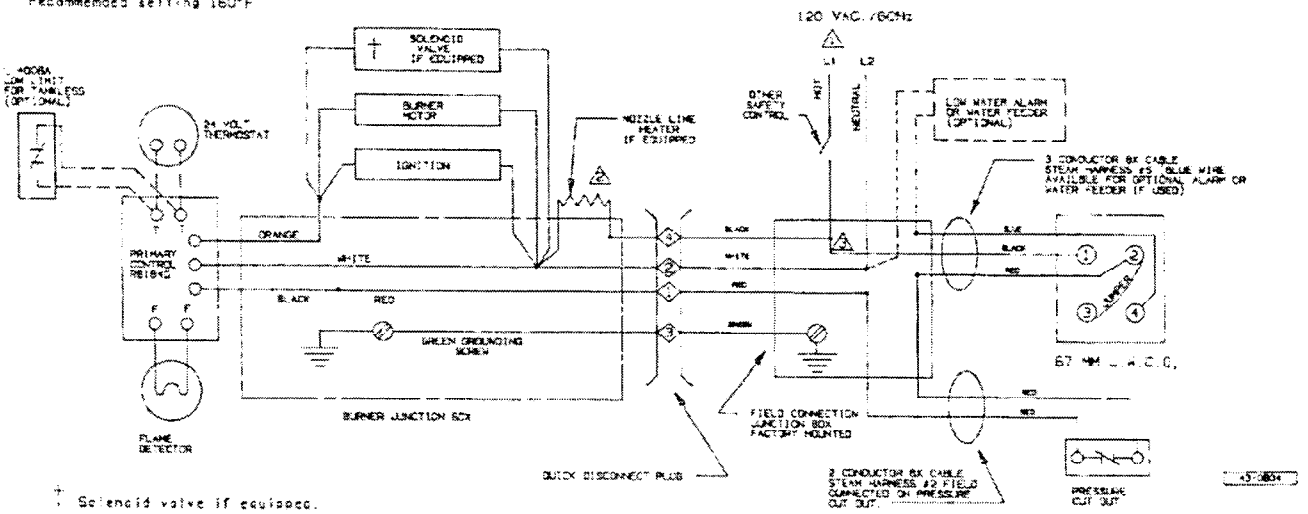

† Solenoid valve if equipped.

• Splice

O Terminal

⚠ Overload protection and disconnect switch must be provided as required by local codes.

⚠ Nozzle line heater, if equipped.

⚠ On burners without nozzle line heater, field connect hot line to single black wire from 3 conductor box cable in 4 x 4 junction box

WIRING FOR PACKAGED STEAM BOILER

For alternate option PS-801-120 L.W.C.O.

High-Pressure Limit
Recommended setting - 0.5 PSI
Differential - 5 PSI
Low Limit (Tankless Model Only) Recommended setting - 160°F

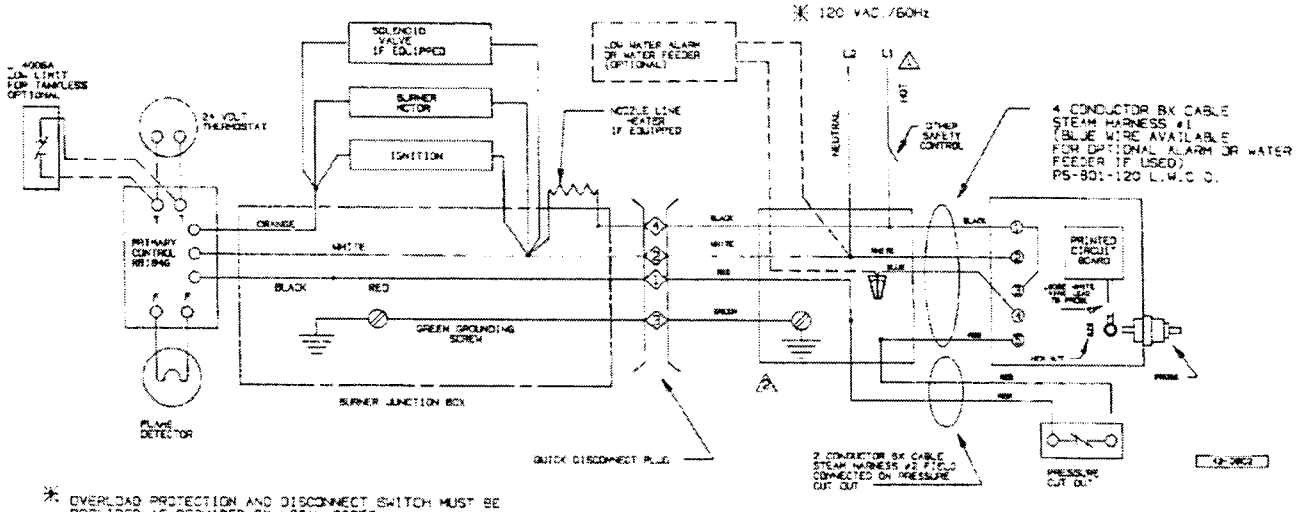

✳ OVERLOAD PROTECTION AND DISCONNECT SWITCH MUST BE PROVIDED AS REQUIRED BY LOCAL CODES.

⚠ ELECTRICAL POWER SUPPLY. PROVIDE DISCONNECT MEANS AND OVERLOAD PROTECTION AS REQUIRED BY CODES.

⚠ GROUNDING CONDUCTOR: GREEN GROUND WIRES ARE FACTORY CONNECTED TO THE GREEN GROUND SCREW IN THIS BOX. FIELD WIRE A GROUNDED CONDUCTOR TO THIS SCREW TOGETHER WITH THE GREEN FACTORY CONNECTED GREEN WIRES.

BURNER DATA — CARLIN BURNERS FOR PACKAGED BOILERS ONLY

(For knocked-down & boiler burner units see publication no. L-42KB)

BOILER MODEL	BURNER MODEL *	FIRING RATE NO.2 OIL (GPH)	NOZZLES SIZE (GPH)	NOZZLES ANGLE & TYPE	NOZZLES MFR	OIL PUMP PRESSURE SETTING (PSIG)	"A" APPROX. HEAD SETTING NO.†	APPROX. AIR BAND OPENING % †
LD-20	71357 99-FRD	.75	.75	70° A	DELAVAN	100	1.0—2.0	45—50
LD-30H	71357 99-FRD	1.00	1.00	60° A	DELAVAN	100	2.0—3.0	70—80
LD-30	71357 99-FRD	1.10	1.10	60° A	DELAVAN	100	2.0—3.0	80—90
	71357 99-FRD	1.25	1.25	60° A	DELAVAN	100	2.0—3.0	90
LD-40H	71373 99-FRD	1.50	1.50	45° ES 70° B	HAGO DELAVAN	100	3.0	50
LD-40	71373 99-FRD	1.60	1.50	70°SS 70° W	HAGO DELAVAN	113	4.0	60
	71373 99-FRD	1.80	1.75	70° SS 60° W	HAGO DELAVAN	105	5.0	90
LD-50H	71399 99-FRD	2.00	2.00	45° P 60° B	HAGO DELAVAN	100	3.0	40
LD-50	71399 99-FRD	2.10	2.00	70°W 70° SS	DELAVAN HAGO	110	3.0	50
	71399 99-FRD	2.35	2.25	70° W	DELAVAN	109	5.0	60
LD-60	71316 102-CRD-3	2.60	2.50	70° P 70° W	HAGO DELAVAN	108	5.0	50
	71316 102-CRD-3	2.85	2.75	70° P 60° W	HAGO DELAVAN	107	6.0	80
LD-60 BAR N.Y.C. ONLY	87189 102-CRD-3	2.60	2.50	45°SS	HAGO	107	5.0	50
LD-70	71332 102-CRD	3.10	2.75	60° SS 60° W	HAGO DELAVAN	125	8.0	90
	71332 102-CRD	3.35	3.00	60° SS 60° W	HAGO DELAVAN	125	10.0	90
LD-70 BAR N.Y.C ONLY	78790 102-CRD	3.10	3.00	60° B 60° SS	DELAVAN HAGO	107	8.0	90
LD-70C	71332 102-CRD	3.00	2.75	60° SS 60° W	HAGO DELAVAN	119	7.0—8.0	80—90

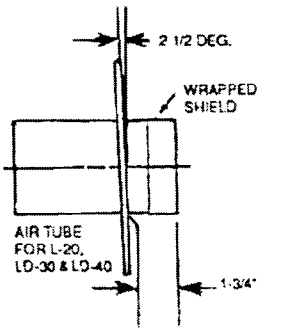

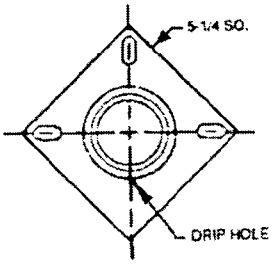

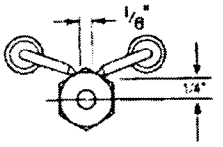

† Head and air band settings are approximate ONLY. See START-UP on page 8 and burner figure below.

* All burner models shown are single stage

NOTE:

1. The air shutters on the burners for models LD-20, LD-30 and LD-40 are blank (closed).
2. The air shutters on the burners for models LD-50, LD-60 and LD-70 are full open.
3. Single slotted air band for LD-20 and LD-30.
4. Double slotted air band LD-40, LD-50, LD-60 and LD-70.

See table for approximate settings.

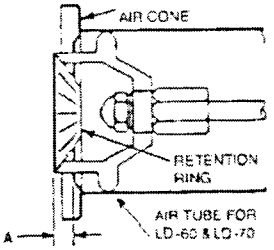

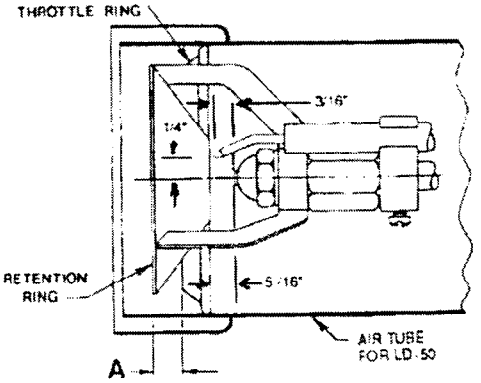

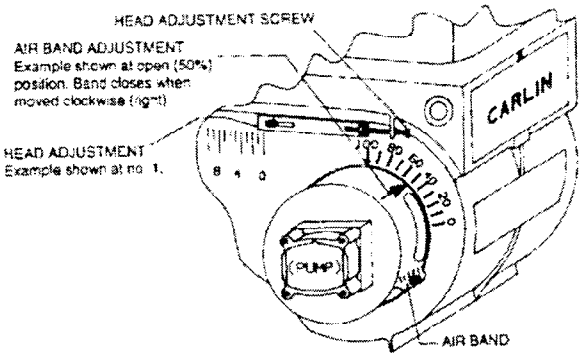

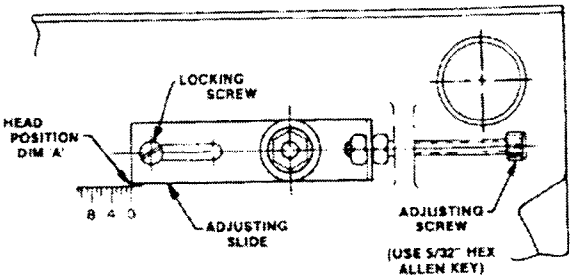

BURNER DATA — BECKETT BURNERS FOR PACKAGED BOILERS ONLY

(For knocked-down & boiler burner units see publication no. L-42KB)

BOILER MODEL	BURNER MODEL *	BURNER HEAD	FIRING RATE (GPH)	NOZZLES SIZE (GPH)	NOZZLES ANGLE & TYPE	NOZZLES MFR.	OIL PUMP PRESSURE SETTING (PSIG)	APPROX. AIR SHUTTER SETTING NO.†	APPROX. AIR BAND SETTING NO. †
LD-20	AFG-SF-11-03	F0	.75	.75	80° B	DELAVAN	100	8	CLOSED
LD-30	AFG-SF-11-07	F4S	1.00	1.00	80° SS	HAGO	100	8	CLOSED
					80° A	DELAVAN			
					80° W	DELAVAN			
			1.10	1.10	80° ES	HAGO	100	9	CLOSED
					80° W	DELAVAN			
			1.25	1.25	80° ES	HAGO	100	10	1/2
					80° W	DELAVAN			
LD-40	AFG-SF-11-02	F120	1.60	1.50	80° ES	HAGO	113	10	1-1/4
					80° B	DELAVAN	113	10	1-1/2
			1.80	1.75	80° SS	HAGO	105	10	3
					80° B	DELAVAN			
LD-50	AFG-SF-11-05	F164	2.10	2.00	80° P	HAGO	110	10	1-1/2
					80° W	DELAVAN			
			2.35	2.25	80° P	HAGO	109	10	3-1/2
					80° W	DELAVAN			

† Air shutter and air band settings shown are approximate ONLY. See START-UP page 8.

* All burner models shown are single stage.

NOTE:
1. Extended heads on all units, except model LD-20
2. No static plate for LD-50 only.
3. Insertion depth $2\frac{5}{32}$" for LD-30 and LD-40; $2\frac{21}{32}$" for LD-50. Insertion depth $1\frac{23}{32}$" for model LD-20.
4. Air Band: 2 slot for LD-30, 4 slot for LD-40, 6 slot for LD-50.

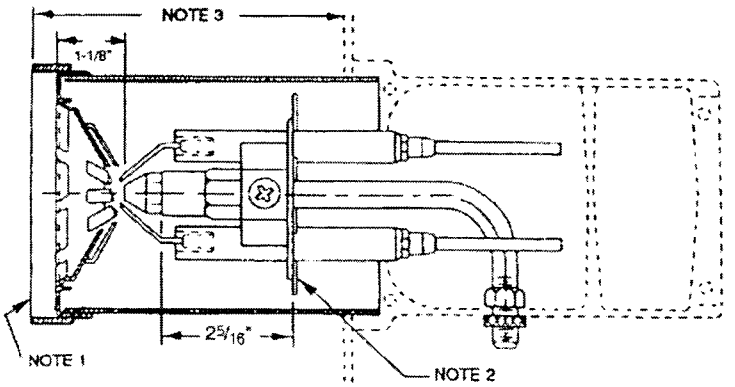

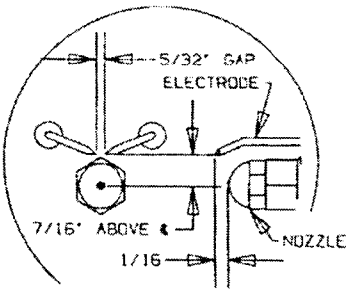

ELECTRODE ADJUSTMENTS
BECKETT

See table for approximate settings.

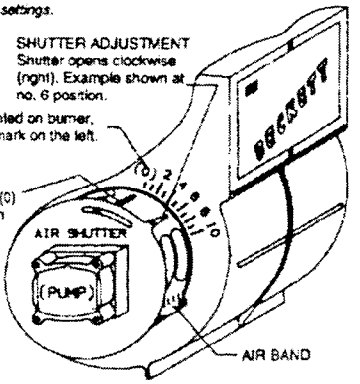

BURNER DATA — RIELLO BURNERS FOR PACKAGED BOILERS ONLY
(For knocked down & boiler burner units see publication no. L-42KB)

BOILER MODEL	BURNER MODEL *	BURNER DESCRIPTION	FIRING RATE NO.2 OIL (GPH)	NOZZLES SIZE (GPH)	NOZZLES ANGLE & TYPE	NOZZLES MFR.	OIL PUMP PRESSURE SETTING (PSIG)	APPROX. AIR SHUTTER SETTING NO.†	APPROX. HEAD SETTING NO.†
LD-30H	40 Series F-5	with short tube	1.00	.75	60° ES	HAGO	178	2.40	0
LD-30HF	40 Series F-5	with short tube	.95	.75	60° ES	HAGO	160	2.20	0
LD-30	40 Series F-5	with short tube	1.10	.85	70° ES	HAGO	160	4.50	2
					70° B	DELAVAN			
			1.25	1.00	70° ES	HAGO	160	4.00	2
					70° W	DELAVAN			
LD-40H	40 Series F-10	with short tube	1.50	1.25	70°B	DELAVAN	145	2.00	0
LD-40	40 Series F-10	with short tube	1.60	1.25	60° ES	HAGO	160	2.50	1
					70° B	DELAVAN			
			1.80	1.35	70° ES	HAGO	180	3.00	1
					70° B	DELAVAN			
LD-50H	40 Series F-10	with short tube	2.00	1.50	45° B	DELAVAN	178	3.00	1
LD-50HF	40 Series F-10	with short tube	1.90	1.50	45°B	DELAVAN	160	2.60	1
LD-50	40 Series F-10	with short tube	2.10	1.65	60° W	DELAVAN	160	4.00	2
			2.35	1.75	60° W	DELAVAN	170	4.00	4

† Air shutter and head settings shown are approximate ONLY. See START-UP page 8.
* All burner models shown are single stage.

NOTE: For proper insertion into combustion chamber see figure 12.

Figure 9A **Riello 40 Series**

MODEL F-5
ELECTRODE SETTING

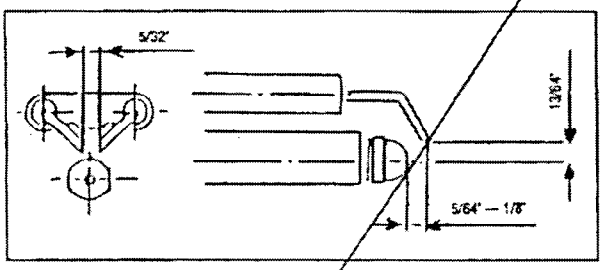

WA

BURNER DATA – RIELLO (continued)

Figure 9B

MODEL F-10
ELECTRODE SETTING

Important: For proper insertion into chamber see figure 12.

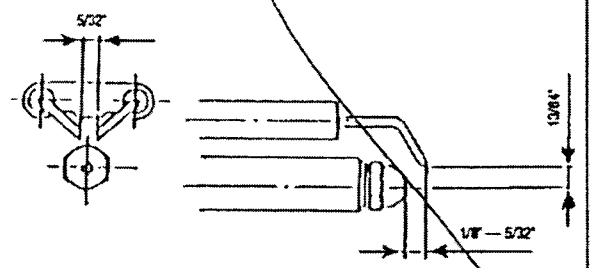

NOTE: ELECTRODES ARE PRESET AT THE FACTORY.

REGULATION OF THE TURBULATOR AND AIR SHUTTER FOR PROPER COMBUSTION

Turbulator Setting

1. Loosen nut, 1, then turn the screw, 2, until the index marker, 3, is aligned with the correct index number.
2. Retighten the retaining nut, 1.

TURBULATOR SETTINGS - RIELLO 40 SERIES

The numbers on the casting are there to denote the high and low end of the scale — in all cases the first mark if "Zero".
The air/oil ratio depends on accurate setting of the turbulator disc.
Be careful when making this adjustment as an incorrect setting will result in an unsatisfactory installation. See figures 10A and B.

Figure 10A

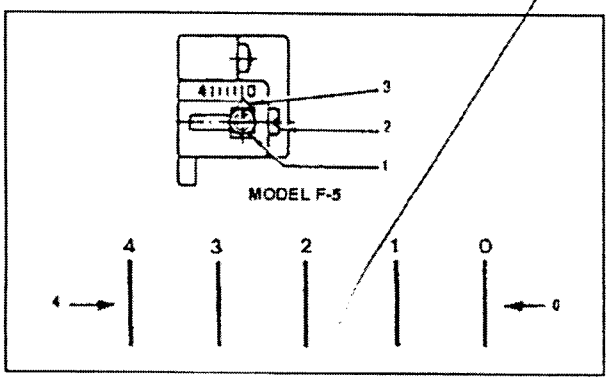

Figure 10B

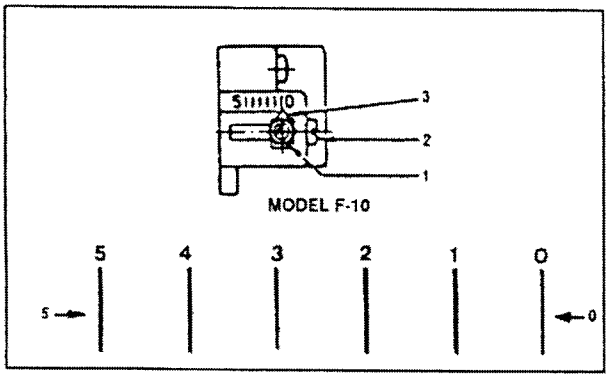

SETTING THE AIR ADJUSTMENT PLATE (See figure 11)

1. The hydraulic AIR SHUTTER (A) is operated by the HYDRAULIC JACK (F), assuring complete opening of the combustion air intake. Regulation of the combustion air flow is made by adjustment of the manual AIR ADJUSTMENT PLATE (D) after loosening the FIXING SCREWS (C and E). The initial setting of the air adjustment plate should be made according to page 16.
2. The proper number on the manual AIR ADJUSTMENT PLATE (D) should line up with the SETTING INDICATOR (B) on the fan housing cover. Once set, the air adjustment plate should be secured in place by tightening SCREWS C and E. Manually open and release the hydraulic air shutter to ensure it has free movement.
3. The final position of the air adjustment plate will vary on each installation. Use instruments to establish the proper settings for maximum CO_2 and a smoke reading of zero.

NOTE: Variations in flue gas, smoke, CO_2 and temperature readings may be experienced when the burner cover is put in place. Therefore, the burner cover **must** be in place when making the final combustion instrument readings, to ensure proper test results.

Figure 11 NA

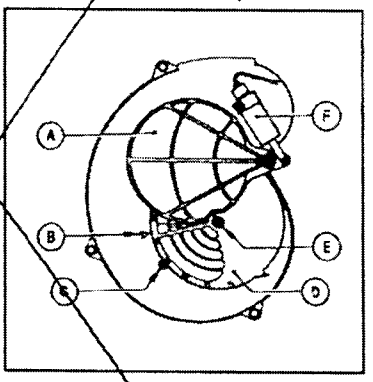

Figure 12

FOR PROPER INSERTION INTO COMBUSTION CHAMBER

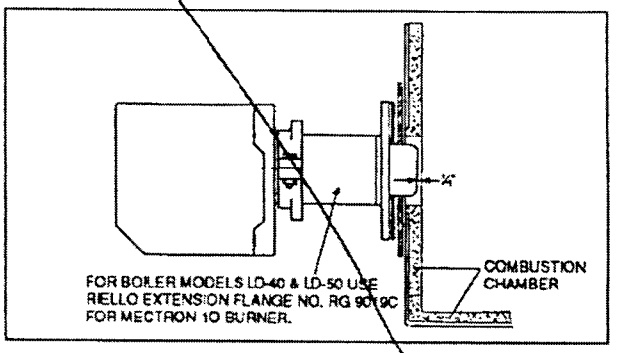

BURNER DATA — WAYNE BURNERS FOR PACKAGED BOILERS ONLY

(For knocked-down & boiler burner units see publication no. L-42KB)

BOILER MODEL	BURNER MODEL *	FIRING RATE NO.2 OIL (GPH)	NOZZLES			OIL PUMP PRESSURE SETTING (PSIG)	"A" APPROX. HEA SETTING†	APPROX. AIR BAND SETTING †
			SIZE (GPH)	ANGLE & TYPE	MFR.			
LD-50	EH	2.15	2.00	80° B	DELAVAN	115 (BAR)†	3/8" Back	1/2"
		2.35	2.25	80° B	DELAVAN	109	1/8" Back	3/4"
				80° P	HAGO			
LD-60	EH	2.60	2.50	80° W	DELAVAN	108 (BAR)†	1/8" Forward	3/4"
				80° SS	HAGO			
		2.85	2.75	80° P	HAGO	107	1/8" Forward	1-1/8"
				80° W	DELAVAN			
LD-70	EH	3.00	3.00	70° W	DELAVAN	100 (BAR)†	1/4" Forward	1-1/2"
		3.10	3.00	70° SS	HAGO	107	1/4" Forward	1-1/2"
				70° W	DELAVAN	107		
		3.35	3.00	70°W	DELAVAN	125	1/4" Forward	1-7/8"
				70°SS	HAGO	113		

* Choke 3" (Wayne part no. 12329); Static Disc 2-1/2", 6" air tube; 1-3/4" insertion for the welded flange.

† Burner specifications marked "BAR" are for LibertyII boilers approved for use in N.Y.C. by Bureau of Air Resources.

NA

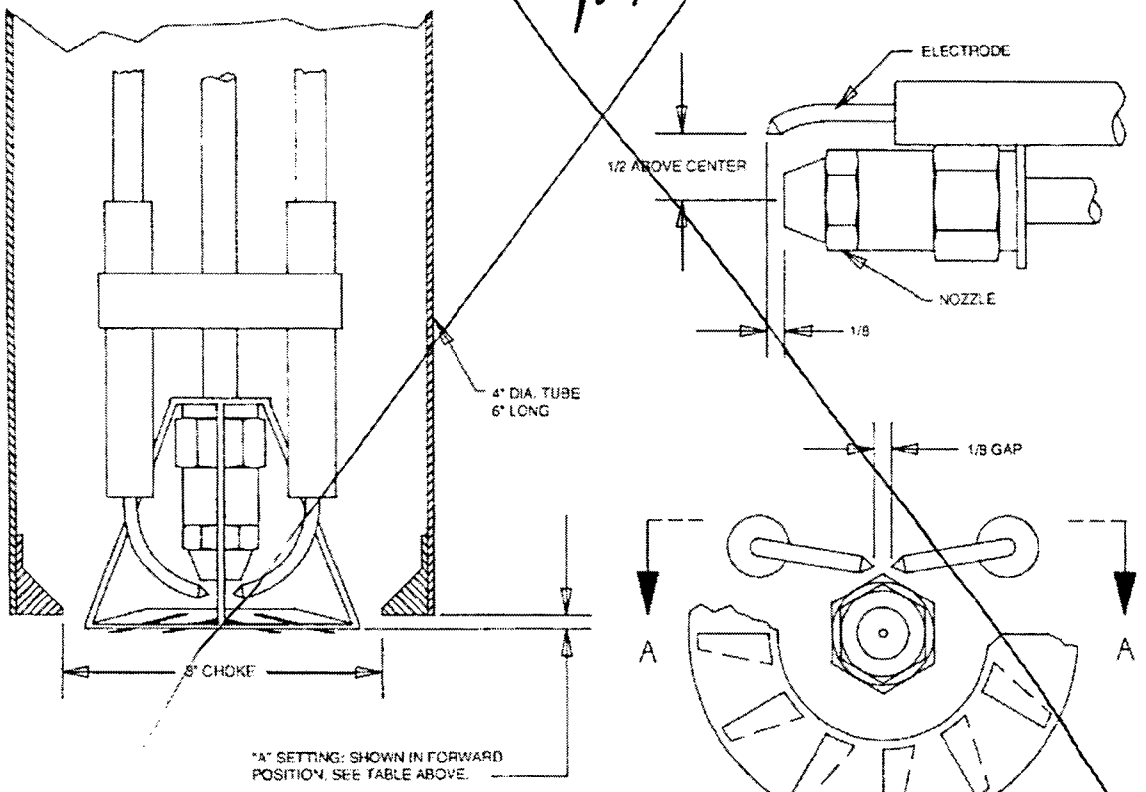

VIEW A-A

CARE AND MAINTENANCE

I. EXTENDED SHUTDOWN, CLEANING OR REMOVAL OF BOILER FROM SERVICE.

DANGER: Use CAUTION when handling chemicals and draining hot water from a boiler. Scalding water and/or chemicals can cause permanent injury to the skin, eyes and respiratory system.

A. Shut down burner by disconnecting all electrical power to the burner by turning OFF the BURNER EMERGENCY SWITCH of this boiler. After shutting down burner, while the boiler is still hot (180°F to 200°F), drain water from the bottom of the boiler until it runs clear.

B. Provide corrosion protection conditioning to the boiler water in the heating system. There are a number of commercial heating system preparations available from your distributor. Follow the preparation manufacturer's instructions.

1. For steam boilers, maintain a *sodium chromate* solution strength of 16 oz. per 50 gallons of water; and refill to the top of the gauge glass.
2. For water boilers, maintain a *sodium chromate* solution strength of 6 oz. per 50 gallons of water, and refill to normal fill-pressure with system vented.
3. Raise water temperature to at least 180°F. for one hour to release dissolved gases.
4. Shut down burner by disconnecting the main switch.

C. To clean the fireside boiler surfaces, first shut down burner by disconnecting all electrical power to the burner by turning OFF the OIL BURNER EMERGENCY SWITCH of this boiler in order to perform the following work in (1) through (10) below.

1. Remove the flue pipe from the boiler flue collar and clean thoroughly.
2. Inspect the entire vent connector back to the chimney and clean if necessary.
3. Inspect the chimney for soot, debris and other unsafe conditions of the chimney and take the necessary action.
4. Remove the flue collector by first removing the top jacket panel. The flue collector is held in place by two hex 1/4-20 screws. Remove the screws and carefully remove the flue collector. Try not to disturb the flat fiberglass rope under the flue collector.
5. When necessary to clean the combustion chamber you must first CLOSE the suction valve (and return valve if two pipe). Then disconnect the oil lines from the burner. The flexible electric conduit connected from the junction box on the boiler to the burner via a plastic connector must be disconnected from the burner by grasping the plastic half of the connector closest to the flexible conduit and gently pulling it in the direction of the conduit until it is disconnected. Remove the single 3/8-16 hex head screw on the LEFT side of the swinging door. You will need a 9/16" drive socket. Open the door to completely expose the combustion chamber for thorough cleaning and for inspection of target wall, blanket (provided in certain models; see rating plate), main cast iron burner door insulation and burner door fiberglass sealing rope. If combustion chamber parts above are badly deteriorated then replace with original factory parts available at your distributor.
6. Use the flue brush to clean the pinned flueways between the sections.† A wire brush may be used to remove any carbon accumulation that may have developed in the combustion chamber. Vacuum the loose soot and debris from the boiler.
7. Inspect the burner combustion head. Clean if necessary and make sure all the adjustments are correct. (See burner data pages for the burner installed.) Replace oil nozzle with new one and readjust electrodes. To insure proper burner operation ONLY THE NOZZLES SPECIFIED IN THIS MANUAL OR ON THE BURNER LABEL SHOULD BE USED FOR REPLACEMENT.
8. Protect all of the fireside surfaces by swabbing with neutral mineral oil.
9. Close main cast iron burner door (door on which burner is mounted). Make sure that the entire seal (fiberglass rope) is making good contact with the boiler casting when replacing 3/8-16 x 1" long hex head bolt and tightening.
10. Check the flue collector seal. This is the flat rope seal on top of the heat exchanger. The rope must be in place adjacent to the long bosses on front and rear sections and adjacent to the short bosses on the intermediate sections. The rope should be directly under the flue collector flanges when the flue collector is replaced. Use the two 1/4-20 x 3/4" washer hex head screws to fasten the flue collector. In order to assure a proper seal be sure that the flue collector is compressing the flat rope and not hanging up on the section bosses. Tighten the two screws.

D. If boiler room is damp, provide ventilation.

II. PROVIDING PROTECTION FOR FREEZING

Anti-freeze is sometimes used in hydronic heating systems to protect against freeze-up in the event of power failure, or safety control shutdown when the building is unoccupied. It should be recognized that unless the building is kept above freezing temperature by some means, the plumbing system is not protected.

Two types of anti-freeze may be used: ETHYLENE GLYCOL, used in automobiles, has desirable properties, but is toxic. Its use may be prohibited when system water/glycol solution is in contact with a potable water vessel (as with a tankless heater). PROPYLENE GLYCOL is used in the quick-freeze food industry; it is practically non-toxic. Its use may be permitted when tankless heaters are used. When anti-freeze must be used, inhibited propylene glycol is recommended. Useful information on the characteristics, mixing proportions, etc. of glycol in heating systems is given in Technical Topics No. 2A, available from the Hydronics Institute, 35 Russo Place, Berkeley Heights, N.J. 07922. Consult glycol manufacturers for sources of propylene glycol.

III. OIL BURNER

Inspect and clean annually and following any period of improper operation. Recheck and adjust settings as specified for burner model and nozzle size. Set burner air and draft regulator, using test instruments to obtain recommended CO_2 and draft without smoke. Refer to page 8.

IV. GENERAL MAINTENANCE

These operations are recommended to be performed at regular intervals:

A. BOILER HEATING SURFACES: clean off all coatings found. Reseal covers.

B. BOILER CONTROLS: check contacts, settings, correct functioning.

C. PIPING: check piping and accessories for leaks.

D. CHIMNEY or STUB VENT and BREECHING: check for obstructions and leaks.

E. COMBUSTION AIR TO BURNER: check for continued POSITIVE supply of air as required. Air needs are greatest in coldest weather. Refer to AIR SUPPLY, page 3.

F. WATER SYSTEM: check

1. System to be full of water and pressure to remain stable (between 12 psi and 25 psi).
2. Air-control system: noise and air binding in radiation should not occur.
3. Water lines, slightest leaks should be corrected.
4. Low water cut-off, for operation (see instructions furnished with unit). See page 9.

G. STEAM SYSTEM: check

1. Low water cut-off, for operation (see instructions furnished with unit). See page 9.
2. Check pressure cut-off for operation. See page 10.
3. Any unusual water conditions. Obtain water analysis and treat water.

H. BOILER ROOM AIR SUPPLY: air vents should be open and free of obstruction. See page 3.

† A flue brush (2-1/4" dia.) is supplied with boiler. Replacements are available from dealer or hardware stores.

Slant/Fin®

SLANT/FIN CORPORATION, Greenvale, N.Y. 11548 • Phone: (516) 484-2600
FAX. (516) 484-5921 • *Canada: Slant/Fin LTD/LTEE. Mississauga, Ontario*
www.slantfin.com

10/15/02 02WP197
MNS

#6 AIR SETTING

#1 SMOKE

BACHARACH, INC.
PCA 25
SN: BV1014
==========

TIME 12:52:13 pm
DATE 10/15/2002

DRAFT

DRAFT -0.02 WC

COMMENTS:

ZERO SMOKE

#2 AIR SETTING

AND #8

ZERO SMOKE

REC'D
NOV 13 2002
FIRE SUBROGATION

Attachment "C"

FUEL OIL FURNACE FIRES

If fire investigators determine a fuel oil furnace to be the origin of a fire, they need to protect and record the scene and forensic information.

BY MARK A. SOKALSKI, P.E.—Homes or businesses, heated by a No. 1 or No. 2 fuel oil-fired furnace, may be destroyed by fire prior to the investigator arriving on the scene. If the investigator suspects the origin of the fire to be near the oil-fired furnace, it is very important for the investigator not to loose important forensic information while digging through the rubble. Chances are the only information the forensic engineer will receive is what the fire investigator submits. Investigators can lose important facts or evidence without even knowing it.

A knowledgeable and experienced fire investigator who collects the proper forensic information and retains the proper physical evidence at the fire scene can make the forensic engineer's work much simpler.

As a forensic engineer, I have examined many fire investigator's reports on fuel oil heated homes that have burned. Most of these reports had the following items in common:

1) The origin of the fire was from the oil burner side of the oil-fired furnace.

2) There were no fuel leaks in the fuel tanks or in the fuel lines, but there was a heavy concentration of thick, tarry, oil residue around the oil burner assembly.

3) The oil storage tank fuel level, prior to the fire, was higher in elevation than the centerline of the oil burner.

4) The forensic engineer determined that the oil-fired furnace burner assemblies were more than 10 years old.

5) The fuel supply piping did not contain oil safety valves (OSV).

What was determined as the cause of these fires?

Most, if not all, residential type oil burner assemblies are equipped with a combination motor and combustion air fan, coupled to a high pressure oil pump, with all shafts rotating as one. To prevent the leakage of fuel oil from around the oil pump shaft and into the burner air inlet, a seal is provided on the shaft end of the oil pump. In some older (pre-1983) fuel oil pumps *(see Figure 1)*, a rotating shaft seat *(#6)* contacts with a non-rotating spring loaded seat *(#5)*. The spring loaded seat is permitted to compensate axially for wear while being held from rotating with the aide of a neoprene diaphragm sealing membrane *(#3)*. In newer pumps (again see Figure #1), the shaft seal is a simple elastomer type, static, double lip seal *(#9)*, similar to a standard automotive shaft seal. In either case, the pump seal system is designed, manufactured, and tested for a maximum of 10 psig (pounds per square inch-gauge pressure). Since the seal pressure and the pump inlet pressure are the same, NFPA-31, Chapter 3, Section 3.4 requires that the appliance inlet pressure not exceed 3 psig (10 vertical feet of oil).

During normal burner operation, a very small amount of fuel oil will seep past the seat faces on the oil pump's mechanical seal or seep past the static lip seal. This very small amount of fuel oil may be undetectable, or show as a periodic small drip only when the shaft is turning. This leakage will be drawn into the blades of the combustion air fan and consumed by the burner.

FIGURE 1
TYPICAL OIL PUMP
GENERAL ARRANGEMENT

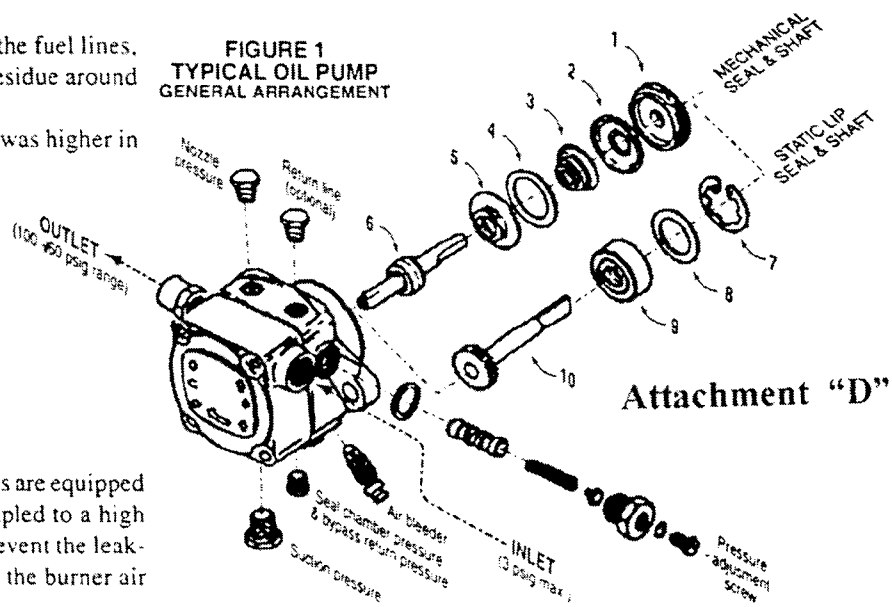

Attachment "D"

In below or underground tank installations, where the oil burner is higher in elevation than the fuel level, a leaking seal will cause an infiltration of air into the pump, allowing the fuel oil to flow back to the tank. This air leakage may cause the oil pump to lose prime. Owners who are experiencing this burner shutdown situation should be grateful, since this annoying shutdown situation is a fail safe warning sign that the pump seal or inlet piping is leaking. If an owner experiences air leakage and loss of prime, a qualified service technician should find and repair the leak. The leak can be verified by applying a 30-minute vacuum test of -20" Hg vac (-10 psig) to the suction line, filter, and oil pump. *(CAUTION, do not include the fuel tanks in this vacuum test, since the tank will collapse inward.)* No change in pressure must occur. Even a slight pressure change over a 30 minute period indicates a fuel leak. Refer to NFPA 31, Chapter 2, Section 1 and Chapter 3, Section 10 for testing.

In furnace installations where the fuel oil tank level is higher than the oil burner, the oil pump suction will remain flooded by gravity flow or by siphon effect, and the oil pump will not lose prime. Instead, fuel oil will leak or drip into the air intake of the burner. While a very small amount of leakage is not a major problem while the burner is operating, an excessive fuel leakage is a serious fire problem, especially when the burner is cycling on and off. My experience shows that most of the fires occur when the old style oil pump diaphragm membrane ruptures due to an aging and degradation of the membrane. Without this diaphragm membrane, the fuel oil has a free flow path to the air intake of the burner. As the burner operates on and off, the oil continually flows into the air intake/fan area, and, if undetected, ignites, burns, and sends intense heat directly overhead. This fire normally ignites the overhead wooden rafters and can eventually engulf the entire house.

In gravity feed systems, preferably with completely full fuel tanks, a qualified service technician should test the storage tank and system by applying air pressure, not exceeding 2.5 psig, to the fuel tanks at the highest point. He should make sure that all fuel valves, in-line solenoids, and the OSV override are open, taking care not to exceed 10 psig at the appliance inlet. After a 30 minute time lapse, no oil leakage is permitted. The service technician should check all fittings, couplings, tubing, piping, oil pump assembly, oil pump shaft seal, and oil pump outlet tubing and fitting to the burner tip for fuel oil leakage. The technician should then repair and retest as necessary. The oil pump should be replaced if any leaks are noted coming from the pump.

Normally identified causes of a fire where the origin has been identified as the oil furnace are as follows:

1) Fuel oil pump assembly is very old:
- The oil pump should be replaced at least every ten years.

2) A burner tip is worn or plugged:
- The burner tip should be replaced at the start of each heating season.

3) Improper start-up and adjustments of an oil burner:
- The burner should be periodically adjusted, but not adjusted by eye,
- CO, percent O_2, and percent hydrocarbon, and draft meters should be used to determine and adjust the operating parameters. (Typical settings are 0.02"w.c. overfire draft, 12.0 percent CO_2, zero ppm CO, and zero to less than 1 on the ASTM D 2156-63T oil burner smoke scale.)

4) Failure of the safety control circuits:
- High temperature limit control failure or primary/flame controls consisting of flame failure, ignition failure or power failure.

5) Plugged exhaust vent or flueway:
- Vents and flueways should be checked, and cleaned if necessary, at the start of each heating season.

6) Lack of burner maintenance:
- General cleaning, motors should be oiled with a good grade of oil, burner head/tip/and electrode gap should be checked at the start of each heating season.

7) Other miscellaneous:
- Plugged central air filters,
- Barometric damper improperly installed, allowing reverse flow, or inoperative barometric damper.
- Improper fusing/electrical short.
- Mechanical failure.

Overlooked cause

One cause, the most common cause, seems to be overlooked and is missing from the above list:

8) Lack of oil safety valves (OSV) on the fuel oil lines:
- The installer, the service technician, the owner, and/or the insurance carrier should insist that an OIL SAFETY VALVE (OSV) be installed on each fuel tank supply line. *See Figure #2. (Note that NFPA 31 does not mention or require this in-line OSV for gravity feed systems.)*

The OSV is an in-line valve which operates by requiring a negative (approx. -1 psig) downstream pressure to permit fuel oil flow. *See Typical Oil Furnace Piping in Figure #3.* With the installation of an in-line oil safety valve (OSV), leaking fuel as a potential fire cause can be virtually eliminated. The valve ranges from $35.00 - $45.00 in cost. This OSV valve provides two (2) important safety functions: .

1) The OSV limits the maximum fuel pressure at the supply inlet to the appliance to an approximate negative 1 psig. *NFPA 31, Chapter 3, Section 9.5.4* requires that "means shall be required to limit the oil pressure at the burner inlet to a maximum of 3 psig."

2) The OSV acts as an anti-leak, or downstream pressure reducing valve (PRV), by preventing oil spills from broken, damaged, or corroded lines, fittings, oil pump seal, or oil pump mechanical seal diaphragm. A maximum of 3 feet in elevation drop beyond the OSV

FIGURE 2
TYPICAL OIL SAFETY VALVE (OSV)

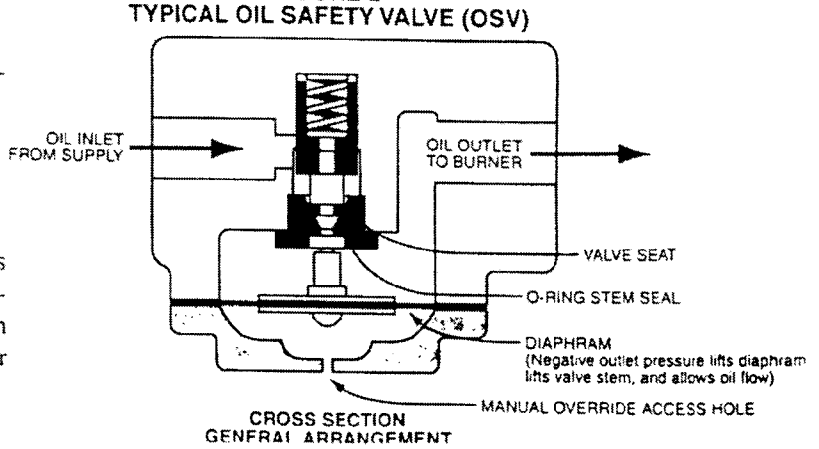

outlet is allowed since a pipe leak more than 3 feet below the OSV outlet would potentially allow a siphoning effect to open the OSV and defeat its purpose.

Two available oil safety valve vendors are: Webster Heating & Specialty Products, Inc. who supplies the OSV 25 (1/4" FNPT), OSV 38 (3/8" FNPT), and OSV 50 (1/2" FNPT) valves with a 60 psig maximum rated inlet pressure, and Suntec Industries, Inc. who supplies the PRV-38 (3/8" FNPT) oil safety valve with a 40 psig maximum rated inlet pressure.

Remember that each fuel oil system is slightly different and the application, location, and installation location for this OSV valve should have been determined by a qualified and knowledgeable service person who is familiar with the fuel oil system and has read and understands the OSV manufacturer's installation instructions.

FIGURE
TYPICAL OIL FURNACE PIPING
ABOVE GROUND/INDOOR FUEL STORAGE TANKS
GENERAL ARRANGEMENT

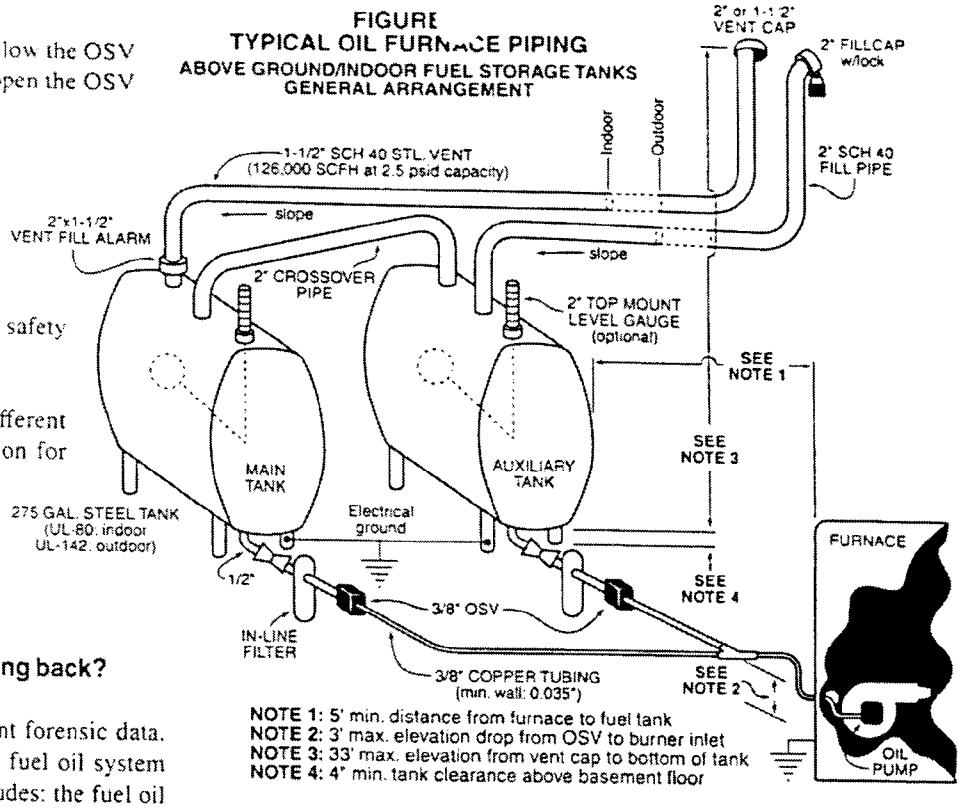

What does the Fire Investigator need to bring back?

The fire investigator needs to obtain the relevant forensic data. The fire investigator needs to photograph the entire fuel oil system before it is disturbed. The entire fuel oil system includes: the fuel oil fill ports, fill lines to the fuel storage tanks, vent lines, the fuel tanks, bottom shut-off valves (noting open or closed position), in-line fuel filters, piping, tubing, fittings, other in-line devices (such as solenoid valves or the OSV), the elevation difference between the bottom of the fuel tank and the centerline of the oil burner assembly, the height of fuel remaining in the tank, the oil burner assembly, all controls, wiring, and fusing, the furnace proper, the exhaust flue ductwork, barometric damper, and chimney or stack.

Never disconnect a coupling, union, compression joint, or flare joint. Always paint match-marks then cut the pipe or tubing far enough away from the fittings so re-threading or a compression joint can be

installed so future testing can be accomplished. Always plug or cap the remaining fuel tank lines after cutting the line, even though the valve may be closed, and the tank is empty. Following this procedure develops good habits and can keep the fire investigator out of trouble.

There is no need to remove and retain the fuel tanks if they are not leaking or in your expert opinion are not the fire's origin. Photograph the complete arrangement. Sketch the piping arrangement and valve positions with dimensions and photograph the system. Try to determine how much fuel was in each tank prior to the fire. Note the actual levels in each fuel tank and the full rated capacity of each tank. Retain evidence samples of fuel from each tank. See Figure #3 which is a typical residential furnace installation which should assist you in obtaining the important forensic data.

There is no need to retain the fuel tank's bottom valving as evidence if they were not shown to be leaking to the exterior. Just note the open or closed position.

Retain the fuel transfer piping in cut-up, piece-marked, sections as evidence. Trying to retain the piping system in its completely assembled form to the furnace may only damage or loosen critical joints and destroy critical evidence.

Find the controlling electrical fuse device that limits electrical power to the oil burner assembly. Note the fuse ampere type, ampere rating, its condition, and downstream wire size. Photograph or retain the fuse device as evidence.

Cut all the wiring to the furnace. Do not remove any wiring or connections inside the furnace.

Disconnect the air ductwork, retaining the filter section, either attached or detached.

Paint mark, evidence tag, photograph, and remove the barometric damper components.

Paint alignment marks, photograph, and disconnect the flue piping. Photograph the chimney or stack opening, noting any restrictions. Retain the ductwork. Photograph the stack or chimney and note the approximate height and interior opening size.

Evidence tag, photograph, and carefully remove the entire furnace complete with the oil burner assembly.

If the fire investigator properly completes his investigation, the forensic engineers on both sides of a disputed claim will have fewer problems in determining the cause of the fire.

References:
1. National Fire Protection Association, NFPA 31, Standards for the Installation of Oil Burning Equipment, 1987 edition.
Chapter 2 - Tank Storage
Chapter 3 - Piping, Pumps, & Valves


Mark A. Sokalski

About the author:
Mark A. Sokalski, P.E. is a Professional Engineer, licensed in the State of Pennsylvania, and a 1974 Chemical Engineering Graduate from Pennsylvania State University. He is employed by Robson Lapina Inc., Forensic Engineers, Architects, Scientists and Fire Investigators, 404 Commerce Park Drive, Cranberry Township, PA 16066. He has 25 years of experience in industrial chemical/mechanical based plants which include Dupont, USX, Merck, PPG, ARCO, Shell Oil, Westinghouse Nuclear, Kenametal, and Veteran Administration Medical Centers.

EMERGENCY RESPONDER HIGHWAY SAFETY WHITE PAPER RELEASED

STEVE AUSTIN–Westminster, Maryland, August 30, 2000. The Cumberland Valley Volunteer Firemen's Association (CVVFA) released a White Paper today identifying strategies to reduce deaths and injuries to emergency service personnel on the roadways. The paper was written under a grant from the United States Fire Administration. It recommends broad initiatives to reduce these tragic incidents.

The document reflects input from 125 experts who assembled in Halfway, Maryland for the first ever Fire Police Summit. Their "Report of Proceedings" was widely distributed. Public comment was solicited and analyzed by a panel who produced the paper. Members of the fire, police and EMS communities along with policy makers took part.

"Protecting Our Emergency Responders on the Highways has been a top issue of our five state association," said Steve Heefner CVVFA President who is an active Fire Police Officer at the Volunteer Fire Company of Halfway, Maryland. "Adoption of the recommendations in the report will make our roads safer for first responders and the motoring public," he added.

The CVVFA solicited the International Association of Fire Chiefs (ICHIEFS) Health and Safety Committee, the National Volunteer Fire Council (NVFC) along with others in the police and fire communities as partners in the effort to reduce the dangers at highway emergency scenes. The CVVFA plans to work with all interested parties in implementing the recommendations of the White Paper.

Copies of the paper, Protecting Our Emergency Responders on the Highways are available by calling the Pennsylvania Fire and Emergency Services Institute (717-236-5995). There is no charge. Downloadable PDF format copies will also be on line at the USFA Web Page. www.usfa.fema.gov

The CVVFA will celebrate its one-hundredth anniversary in 2001. The Association's primary mission is to provide assistance to the volunteer fire service throughout the Mid-Atlantic. Because of its unique five-state membership, the CVVFA often takes positions on national issues affecting all emergency responders whether they are volunteer or career.

IN THE COURT OF COMMON PLEAS OF CLEARFIELD COUNTY
PENNSYLVANIA

State Farm Insurance Company, as Subrogee of
Thomas Rauch and Mona Rauch
vs. No. 2003-01809-CD
Frank Godissart and Richard Bloom

OATH OR AFFIRMATION OF ARBITRATORS

Now, this 16th day of August, 2005, we the undersigned, having been appointed arbitrators in the above case do hereby swear, or affirm, that we will hear the evidence and allegations of the parties and justly and equitably try all matters in variance submitted to us, determine the matters in controversy, make an award, and transmit the same to the Prothonotary within twenty (20) days of the date of hearing of the same.

Richard A. Bell, Esq. — Chairman

Ronald L. Collins, Esq.
Kimberly M. Kubista, Esq.

FILED
AUG 16 2005
William A. Shaw
Prothonotary/Clerk of Courts

Notice to Atty Deegan Defs.

Sworn to and subscribed before me this
August 16, 2005

Prothonotary

AWARD OF ARBITRATORS

Now, this 16 day of Aug., 2005, we the undersigned arbitrators appointed in this case, after being duly sworn, and having heard the evidence and allegations of the parties, do award and find as follows:

Award in favor of Defendants

Chairman

(Continue if needed on reverse.)

ENTRY OF AWARD

Now, this 16th day of August, 2005, I hereby certify that the above award was entered of record this date in the proper dockets and notice by mail of the return and entry of said award duly given to the parties or their attorneys.

WITNESS MY HAND AND THE SEAL OF THE COURT

Prothonotary

By _____

State Farm Insurance Company
Thomas Rauch
Mona Rauch

Vs.

Frank Godissart Richard Bloom

: IN THE COURT OF COMMON PLEAS OF CLEARFIELD COUNTY

: No. 2003-01809-CD
:

NOTICE OF AWARD

TO: FRANK GODISSART

You are herewith notified that the Arbitrators appointed in the above case have filed their award in this office on August 16, 2005 and have awarded:

Award in favor of Defendants

William A. Shaw
Prothonotary
By

August 16, 2005
Date

In the event of an Appeal from Award of Arbitration within thirty (30) days of date of award.

State Farm Insurance Company
Thomas Rauch
Mona Rauch

Vs.

Frank Godissart Richard Bloom

: IN THE COURT OF COMMON PLEAS OF CLEARFIELD COUNTY

: No. 2003-01809-CD
:

NOTICE OF AWARD

TO: RICHARD BLOOM

You are herewith notified that the Arbitrators appointed in the above case have filed their award in this office on August 16, 2005 and have awarded:

Award in favor of Defendants

William A. Shaw
Prothonotary
By

August 16, 2005
Date

In the event of an Appeal from Award of Arbitration within thirty (30) days of date of award.

State Farm Insurance Company
Thomas Rauch
Mona Rauch

: IN THE COURT OF COMMON PLEAS OF CLEARFIELD COUNTY

Vs.

: No. 2003-01809-CD
:

Frank Godissart Richard Bloom

NOTICE OF AWARD

TO: CHRISTOPHER P DEEGAN

You are herewith notified that the Arbitrators appointed in the above case have filed their award in this office on August 16, 2005 and have awarded:

Award in favor of Defendants

William A. Shaw
Prothonotary
By_____

August 16, 2005
Date

In the event of an Appeal from Award of Arbitration within thirty (30) days of date of award.

Arb-8-16-05 CA

Pre-Trial Statement
July 13, 2005

03-1809-CD

State Farm Insurance Co.
As subrogee of
Thomas & Mona Rauch

Vs.

Frank Godissart
&
Richard Bloom

I, Richard E. Bloom, have been installing hot water and hot air systems for over 30 years. I have a very high education in this department. I am very sorry for this mishap, but I do not want to take the blame for this problem. This boiler was installed correctly in according to specs of boiler manufacturer.

They are saying that there was no oil filter on the inline to the boiler. They also say the wiring to the vent damper was wired improperly. It was wired correctly. Also, they are claiming that the barometric draft was installed in the wrong manner. They are claiming that the air band shutter was set wrong, that the points and nozzle were never set. These are all false statements. This boiler was set up according to the instruments and procedure.

This boiler was fired three times after being installed, and witnessed by myself, Frank Godissart, Lee Swatsworth (also, installer), and the Rauchs and employees of Frank Godissart.

I feel that this boiler was never serviced from two years after installation (not at least by myself). If however it was serviced, then the serviceman should be at fault.

The last time I worked on this boiler, the filter was very badly plugged. I feel the oil was not clean coming out of the new oil tank. I do have a few witnesses to this installment and set up. This boiler ran functional for two years without a service by myself, then went on the blink. This can occur if a boiler is not properly maintained according to the owner manual. On the first page, it will tell the owner to service boiler once a year. I feel the problem is due to neglect, not installation.

Richard E. Bloom

Arb. 4-26-05 - 1^00 Am

Pre-Trial Statement

State Farm Insurance Co.
As subrogee of
Thomas & Mona Rauch

RECEIVED

APR 0 8 2005

COURT ADMINISTRATOR'S
OFFICE

Vs.

Frank Godissart
&
Richard Bloom
#F03-1809-CD

I, Richard E. Bloom, have been installing hot water and hot air systems for over 30 years. I have a very high education in this department. I am very sorry for this mishap, but I do not want to take the blame for this problem. This boiler was installed correctly in according to specs of boiler manufacturer.

They are saying that there was no air filter on the inline to the boiler. They also say that the wiring to the vent damper was wired improperly. It was wired correctly. Also, they are claiming that the barometric draft was installed in the wrong manner. They are claiming that the air band shutter was set wrong, that the points and nozzle were never set. These are all false statements. This boiler was set up according to instruments and procedure.

This boiler was fired three times after being installed, and witnessed by myself, Frank Godissart, Lee Swats worth (also, installer), and the Rauchs and employees of Frank Godissart.

I feel that this boiler was never serviced from two years after installation (not at least my myself). If however, it was serviced, then the serviceman should be at fault.

The last time I worked on this boiler, the filter was very badly plugged. I feel the oil was not clean coming out of a new oil tank. I do have a few witnesses to this installation and set up. This boiler ran functional for two years without a service, then went on the blink. This can occur if a boiler is not properly maintained according to the owner manual. On the first page, it will tell owner to service boiler once a year. I feel the problem is due to neglect, not installation.

Richard E. Bloom

Richard E Bloom
Po Box 13
Olanta Pa 16863

Office of Court Administrator
Clearfield County Courthouse
230 East market Street, Suite 228
Clearfield, Pa 16830

WEBER GALLAGHER
SIMPSON STAPLETON
FIRES & NEWBY LLP

Arb 4-26-05

April 18, 2005

David Meholik, Court Administrator
Clearfield Courthouse
230 E. Market Street
Clearfield, PA 16830

Direct Dial: (412) 281-4573
Email: rporada@wglaw.com

RE: Thomas & Mona Rauch v. Richard Bloom & Frank Godissart
No. : 03-1809-CD
Our File Number: 0020444

Dear Mr. Meholik:

Enclosed please find an original Pre-Trial Statement on behalf of the Plaintiff in the above-referenced matter.

By way of copy of this correspondence, the Plaintiff's Pre-Trial Statement has been provided to the Defendants and the Arbitrators in accordance with Local Rule 1306A.

Thank you for your kind assistance in this regard. Should you have any questions or concerns, please do not hesitate to contact me.

Very truly yours,

Renee M. Porada

Renee M. Porada

RMP:RMP
Enclosures
cc: Frank Godissart
Richard Bloom
Richard A. Bell, Esquire
John R. Ryan, Esquire
Gary A. Knaresboro, Esquire

IN THE COURT OF COMMON PLEAS OF CLEARFIELD COUNTY, PENNSYLVANIA

STATE FARM INSURANCE COMPANY , as subrogee of Thomas and Mona Rauch,

Plaintiff,

vs.

FRANK GODISSART and RICHARD BLOOM,

Defendants.

CIVIL DIVISION—ARBITRATION

NO.: 03-1809-CD

PRE-TRIAL STATEMENT PURSUANT TO LOCAL RULE 1306A

Filed on behalf of Plaintiff:
State Farm Insurance Company as subrogee of Thomas and Mona Rauch

Counsel of Record for This Party:

Christopher P. Deegan, Esquire
PA I.D. # 85635

Renee M. Porada, Esquire
PA I.D. # 89604

WEBER GALLAGHER SIMPSON
STAPLETON FIRES & NEWBY LLP
Firm #594
2 Gateway Center
Suite 1450
Pittsburgh, PA 15222
Phone: (412) 281-4541
Fax: (412) 281-4547

IN THE COURT OF COMMON PLEAS OF CLEARFIELD COUNTY, PENNSYLVANIA

STATE FARM INSURANCE COMPANY , as subrogee of Thomas and Mona Rauch,

Plaintiff,

vs.

FRANK GODISSART and RICHARD BLOOM,

Defendants.

CIVIL DIVISION—ARBITRATION

NO.: 03-1809-CD

PRE-TRIAL STATEMENT PURSUANT TO LOCAL RULE 1306A

And now comes the Plaintiff, State Farm Insurance Company as subrogee of Thomas and Mona Rauch, by and through its counsel, Christopher P. Deegan, Esquire, Renee M. Porada, Esquire and Weber Gallagher Simpson Stapleton Fires & Newby, LLP and files the following Pre-Trial Statement Pursuant to Local Rule 1306A.

A. Brief Statement of the Case

At all times relevant hereto the Rauch residence was covered by a policy of insurance issued by State Farm Insurance Company. Frank Godissart was the contractor responsible for the construction of the Rauch residence. As part of the construction of the Rauch residence, Godissart subcontracted Richard Bloom to install a Slant Fin Corporation Liberty II oil-fired hot water boiler (boiler) in the Rauch residence. Bloom installed the Boiler in the Rauch residence in or about the fall of 1999. On or about January 23, 2002, black soot discharged from the hot water boiler throughout the Rauch residence causing severe soot damage to the home and its contents and forcing the Rauch family to obtain alternative living arrangements for a period of time following the incident. The soot emission was the direct result of the failure of Bloom to properly install the boiler and its component and auxiliary equipment.

Bloom's failure to properly install the boiler and its component and auxiliary equipment constituted negligence and breach of contract. Godissart was negligent and breached his contract with regard to the Rauch residence in subcontracting the installation of the boiler to Bloom who negligently installed the same.

B. Citation to Applicable Case or Statute

The Plaintiff intends to rely upon the general law of contract as well as the law of negligence. The Plaintiff does not believe that this matter raises any novel issues of law.

C. List of Witnesses

Thomas Rauch

Mona Rauch

Mark Albert Sokalski, P.E. or other representative of engineering firm

D. Damages

$20,000.00

All applicable estimates and invoices are attached.

Respectfully submitted,

WEBER GALLAGHER SIMPSON STAPLETON FIRES & NEWBY, LLP

By: Renee M. Porada

Renee M. Porada, Esquire

Attorney for Plaintiff

Date: 4/18/05

CERTIFICATE OF SERVICE

I hereby certify that a true and correct copy of the foregoing Pre-trial Statement has been served by first class U.S. mail, postage prepaid, this 18th day of April, 2005, upon the following parties:

Frank Godissart
RR 2
Clearfield, PA 16830

Richard Bloom
P.O. Box 13
Olanta, PA 16863

Richard A. Bell, Esquire
Bell, Silberblatt & Wood
Post Office Box 670
Clearfield, PA 16830
Arbitrator

John R. Ryan, Esquire
Belin & Kubista
Post Office Box 1
Clearfield, PA 16830
Arbitrator

Gary A. Knaresboro, Esquire
Attorney at Law
33 Beaver Drive, Suite 2
DuBois, PA 15801
Arbitrator

Renee M. Porada

Renee M. Porada, Esquire

COLORS GALORE CONTRACTORS
RR 1, BOX 318
CLEARFIELD, PA 16830
(814) 765-6637

March 22, 2002

Mona Rauch

RE: Price quote for vertical blinds.

Hunter Douglas Innerstyle Vertical - Freehang
Vanes Only 3 ½"
Price Chart 11 Fabric

Quantity	Description	Each	Total
30	Vanes @ 82" Net Length	49.00	1,470.00
68	Vanes @ 82" Net Length	49.00	3,332.00
26	Vanes @ 52 ½" Net Length	39.00	1,014.00
1	Valance Insert 110" Net	67.00	67.00
2	Valance Insert 124" Net	71.00	142.00
1	Valance Insert 98" Net	62.00	62.00
			6,087.00
	Discount of 40%		-2,434.80
			3,652.20
	Freight		45.00
			3,697.20
	6% Sales Tax		221.83
			3,919.03
	Installation		250.00
	Total		4,169.03

Prim Full
4-22-02
M.H.

RAUCH, THOMAS

State Farm Insurance Companies

01/28/2002

38-P546-670

Room: Basement

LxWxH 40'0" x 30'0" x 8'0"

1,120.00	SF Walls	1,200.00	SF Ceiling	2,320.00	SF Walls & Ceiling
1,200.00	SF Floor	133.33	SY Flooring	140.00	LF Floor Perimeter
320.00	SF Long Wall	240.00	SF Short Wall	140.00	LF Ceil. Perimeter

DESCRIPTION	QUANTITY	UNIT COST	RCV	DEPREC.	ACV
Clean concrete on part of the floor	900.00 SF	0.13	117.00		117.00
Clean light fixture - fluorescent	2.00 EA	5.94	11.88		11.88
Clean door - French (per side)	1.00 EA	9.33	9.33		9.33
Clean foundation wall	1,072.00 SF	0.23	246.56		246.56
Clean floor or roof joist system	1,200.00 SF	0.41	492.00		492.00
Clean light fixture	1.00 EA	4.48	4.48		4.48
Clean door / window opening (per side)	3.00 EA	5.48	16.44		16.44
Clean window unit (per side) 3 - 9 SF	1.00 EA	4.44	4.44		4.44
Contents - move out then reset - Extra large room large amount of contents to move around in the basement	1.00 EA	104.96	104.96		104.96
Room Totals: Basement			**1,007.09**		**1,007.09**

Room: Personal Property

DESCRIPTION	QUANTITY	UNIT COST	RCV	DEPREC.	ACV
General clean - up Clean contents in the basement	5.00 HR	17.26	86.30		86.30
Laundry For washing laundry as a result of the loss	31.00 EA	5.00 *	155.00		155.00
Room Totals: Personal Property			**241.30**		**241.30**

Line Item Totals: 38-P546-670	**1,248.39**	**1,248.39**

Grand Total Areas:

1,120.00	SF Walls	1,200.00	SF Ceiling	2,320.00	SF Walls & Ceiling
1,200.00	SF Floor	133.33	SY Flooring	140.00	LF Floor Perimeter
320.00	SF Long Wall	240.00	SF Short Wall	140.00	LF Ceil. Perimeter

State Farm Insurance Companies

01/28/2002

STRUCTURAL DAMAGE CLAIM POLICY

When you have a covered structural damage claim to your real property, you should know ...

-We want you to receive quality repair work to restore the damages to your property.

-We will provide you with a detailed estimate of the scope of damage and costs of repairs. Should the contractor you select have questions concerning our estimate, they should contact your claim representative directly.

-You may have the repairs made by a contractor of your choice.

-If you select a contractor whose estimate is the same as or lower than our estimate, based on the same scope of damages, we will pay based upon their estimate. If your contractor's estimate is higher than ours, you should contact your claim representative prior to beginning the repairs.

-State Farm cannot authorize any contractor to proceed with work on your property. Repairs should proceed only with your authorization.

-State Farm does not guarantee the quality of workmanship of any contractor or guarantee that the work will be accomplished within any specific time frame.

-It is understood that the contractor is hired by you, our insured, and that they work for you - not State Farm.

03/28/2002 15:37 3282753

DIRECT INQUIRIES TO:

4324

THE SHERWIN-WILLIAMS CO
ACCOUNTS RECEIVABLE DEPARTMENT
980 BEAVER DR
DU BOIS PA 15801-2514

PHONE NO.: 814 371-7780

ACCOUNT NUMBER	JOB	CREDIT LIMIT	STORE NUMBER
8706-2183-8	01	1501	1174

STMT. DATE	TERMS	PAYMENT DUE
02-28-2002	NET 20TH PROX	03-20-2002

217831
8372

SHERWIN Williams

**********AUTO** ALL FOR AADC 150
HERB BULLERS JR CONTRACTING
RR 5 BOX 200A
BROOKVILLE PA 15825-9516

PREVIOUS BALANCE	CURRENT MONTH CHARGES	CURRENT MONTH CREDIT	ACCOUNT BALANCE
	991.10		991.10

DATE	REFERENCE NO.	TRANSACTION TYPE	SELLING STORE	AMOUNT	TOTAL
CURRENT DUE - OPEN ITEMS					
02-18-2002	14998	CHARGE	1174	452.05	
02-25-2002	17891	CHARGE	1174	224.98	
02-27-2002	19252	CHARGE	1174	314.07	
					991.10

CURRENT	1-30	31-60	PAST DUE 61-90	OVER 90	NET AMOUNT DUE
991.10					991.10

▼ DETACH HERE AND RETURN LOWER PORTION WITH YOUR PAYMENT ▼

▼ CHECK ITEMS BEING PAID		▼ CHECK ITEMS BEING PAID		▼ CHECK ITEMS BEING PAID	
REFERENCE NO.	AMOUNT	REFERENCE NO.	AMOUNT	REFERENCE NO.	AMOUNT
14998	452.05				
17891	224.98				
19252	314.07				

IF ADDRESS CHANGE IS REQUIRED CHECK HERE AND NOTE CHANGES IN SPACE PROVIDED ON REVERSE SIDE.

☐

SEND PAYMENTS TO:

THE SHERWIN-WILLIAMS CO
980 BEAVER DR
DU BOIS PA 15801-2514

AMOUNT DUE 991.10

AMOUNT ENCLOSED

HERB BULLERS JR CONTRACTING
670621838 01 00092 1174 02282002 00009911099

CARPET ONE CLEARFIELD

RT 322 EAST, CLEARFIELD, PA 16830

PHONE 814-765-3357

FIRST NAME	LAST NAME	CLASS	SALESPERSON	CONTACT DATE
SPANKY/MONA	RAUCH	*OWES*	ED	2/25/02

ADDRESS	HOME PHONE	ORDER DATE	INST. DATE
PO BOX 443	7653512	2/25/02	3/8/02

		WORK PHONE	INSTALLER
CLEARFIELD	PA		STEVE

FINANCE TYPE	FINANCE TERMS	FINANCE ACCOUNT #	EVERGUARD/LEES	INVOICE
CASH/CHECK	COD			43.00

AREA	STYLE	COLOR	SIZE	MILL & STATUS
LR/BR/STEPS	SUNDOWN	LONDON FOG	12X122	

PO on draft to Sergio

INSTALLATION INSTRUCTIONS

SOOT DAMAGED CARPET AND PAD

WAREHOUSE CUTS

DIRECTIONS

879 N, L AT LIGHT, PAST BI LO, A FRAME ON RT

CARPET UNITS	PAD TYPE A
162.00	BLK DIA

VINYL UNITS	PAD TYPE B

LAMINATE UNITS

HARD UNITS

MATERIAL	$5,196.76
SALES TAX	
SUBTOTAL	**$5,196.76**
LABOR	
TOTAL	5,196.76
DEPOSIT	
BALANCE DUE	**$5,196.76**

THANK YOU! WE APPRECIATE YOUR BUSINESS

3/4/2002 289036

State Farm Insurance Co.
Denise Serbin
2 Sellers Drive
Altoona PA 16601

Thomas Rauch
P.O.Box 443
Clearfield, PA 16830
Claim # 38-P546-670

SERVPRO of Clearfield County
729 South Brady Street, Suite A
DuBois, PA 15801

2/28/2002

Subcontract:Carpet Reinstall/Install	5,196.76
Subcontract:Painting	4,395.77
Insurance:Fire Damage	6,009.33T
PA Sales Tax	360.56

Minus $250.00 deductible

$15,962.42

Phone: 814-371-4317
Tax ID # 25-1859996

Customer Signature

No One Home

Date: 02/08/2002 12:16:29 PM Page: 1

SERVPRO Servpro of Clearfield County

729 South Brady St.
Dubois, PA 15801
(814) 371-4317
Fax: (814) 371-4324
Tax ID #: 25-1859996
Email: servpro8650@adelphia.net

ESTIMATE

Insured: Rauch Thomas
Adjuster:
Claim #: 38-P546-670
Policy #:
Estimate Type: Smoke

FNOL Date: 01/24/2002
Agent:
Loss Date: 01/23/2002 11:21:17 AM
Price List: SERVPRO of Clearfield County
Estimator:

Room: Job/Struct

Object	Service	Qualifier	Quantity	UOM	Price	Total	Tax	Type
			0.00			$0.00		

Structure Total	$0.00
Contents Total	$0.00
Room Total	$0.00

ROOM NOTES:

Room: F-Kitchen (L=14'7" W=17'6" H=8'0")

cfRoom	2,041.67	syFlooring	28.36	lfCeiling Perimeter	64.17
sfCeiling	255.21	sfWalls	513.33	lfFloor Perimeter	64.17
sfFloor	255.21			sfWalls/Ceiling	768.54

Object	Service	Qualifier	Quantity	UOM	Price	Total	Tax	Type
Microwave	Clean		1.00	EA	$5.00	$5.00	T	C
Oven	Clean		1.00	EA	$10.00	$10.00	T	C
Refrigerator	Clean		1.00	EA	$15.00	$15.00	T	C
Sinks, Double	Clean		1.00	EA	$10.00	$10.00	T	S
Table, Kitchen	Clean		1.00	EA	$8.50	$8.50	T	C
Chair, Upholstered	Clean and Deodorize		8.00	LF	$12.00	$96.00	T	C
Dishwasher	Clean and Polish		1.00	EA	$8.00	$8.00	T	C
Heat, Baseboard Water	Clean		6.50	LF	$1.20	$7.80	T	S

SERVPRO ScanEB™

Date: 02/08/2002 12:16:29 PM Page: 2

Insured: Rauch Thomas

Structure Total	$17.80
Contents Total	$142.50
Room Total	$160.30

ROOM NOTES:

Room: F-Bedroom (L=10'0" W=9'4" H=8'0")

cfRoom	746.67	syFlooring	10.37	lfCeiling Perimeter	38.67
sfCeiling	93.33	sfWalls	309.33	lfFloor Perimeter	38.67
sfFloor	93.33			sfWalls/Ceiling	402.67

Object	Service	Qualifier	Quantity	UOM	Price	Total	Tax	Type
Beds	Clean		1.00	EA	$12.50	$12.50	T	C
Book Case	Clean		1.00	EA	$10.00	$10.00	T	C
Dresser	Clean		1.00	EA	$10.00	$10.00	T	C
Television, Portable	Clean		1.00	EA	$5.00	$5.00	T	C
Toys	Clean		1.00	HRS	$25.00	$25.00	T	C
Cabinet, Filing	Clean		1.00	EA	$8.00	$8.00	T	C

Structure Total	$0.00
Contents Total	$70.50
Room Total	$70.50

ROOM NOTES:

Room: F-Bathroom (L=11'5" W=5'0" H=8'0")

cfRoom	456.67	syFlooring	6.34	lfCeiling Perimeter	32.83
sfCeiling	57.08	sfWalls	262.67	lfFloor Perimeter	32.83
sfFloor	57.08			sfWalls/Ceiling	319.75

Object	Service	Qualifier	Quantity	UOM	Price	Total	Tax	Type
Heat, Baseboard Water	Clean		5.00	LF	$1.20	$6.00	T	S
Shelving	Clean		12.00	LF	$0.50	$6.00	T	S

SERVPRO Scope™

Date: 02/08/2002 12:16:29 PM Page: 3

Insured: Rauch Thomas

Structure Total	$12.00
Contents Total	$0.00
Room Total	$12.00

ROOM NOTES:

Room: F-Livingroom (L=30'0" W=20'0" H=22'0")

cfRoom	13,200.00	syFlooring	66.67	lfCeiling Perimeter	100.00
sfCeiling	600.00	sfWalls	2,200.00	lfFloor Perimeter	100.00
sfFloor	600.00			sfWalls/Ceiling	2,800.00

Object	Service	Qualifier	Quantity	UOM	Price	Total	Tax	Type
Chair, Upholstered	Clean and Deodorize		3.00	LF	$12.00	$36.00	T	C
Sofa	Clean and Deodorize		10.00	LF	$12.00	$120.00	T	C
Table, Coffee	Clean		1.00	EA	$10.00	$10.00	T	C
Television, Console	Clean		1.00	EA	$10.00	$10.00	T	C
Chair, Upholstered	Clean and Deodorize		8.00	LF	$12.00	$96.00	T	C
Entertainment Center	Clean and Polish		1.00	EA	$30.00	$30.00	T	C
Exercise Equipment	Clean		1.00	EA	$15.00	$15.00	T	C
Table, Dining	Clean and Polish		1.00	EA	$10.00	$10.00	T	C
Table, End	Clean		2.00	EA	$5.00	$10.00	T	C
Lamp, Hurricane	Clean		1.00	EA	$13.00	$13.00	T	C
Clocks	Clean		1.00	EA	$6.00	$6.00	T	C
Planter Stands	Clean		1.00	EA	$6.00	$6.00	T	C
Stereo Speakers	Clean		1.00	EA	$15.00	$15.00	T	C
Stereos	Clean		1.00	EA	$15.00	$15.00	T	C
Lamp with Fabric Shade	Clean and Polish		1.00	EA	$15.00	$15.00	T	C
Blinds,Cloth	Clean		120.00	EA	$1.00	$120.00	T	S
Rug, Area	Hot Water Extraction		35.00	SF	$0.25	$8.75	T	C
Contents, Misc.	Clean		1.00	HRS	$25.00	$25.00	T	C

Structure Total	$120.00
Contents Total	$440.75
Room Total	$560.75

ROOM NOTES:

SERVPRO SCANER™

Insured: Rauch Thomas

Room: F-Bedroom2 (L=17'10" W=14'8" H=8'0")

cfRoom	2,092.44	syFlooring	29.06	lfCeiling Perimeter	65.00
sfCeiling	261.56	sfWalls	520.00	lfFloor Perimeter	65.00
sfFloor	261.56			sfWalls/Ceiling	781.56

Object	Service	Qualifier	Quantity	UOM	Price	Total	Tax	Type
Dresser	Clean		2.00	EA	$10.00	$20.00	T	C
Bed, Post/Spindle	Clean		1.00	EA	$25.00	$25.00	T	C
Night Stand	Clean		1.00	EA	$5.25	$5.25	T	C
Cabinet, Gun	Clean		1.00	EA	$10.00	$10.00	T	C
Lamp, Crystal	Clean		1.00	EA	$13.00	$13.00	T	C
Television, Portable	Clean		1.00	EA	$5.00	$5.00	T	C
Heat, Baseboard	Clean		6.00	LF	$1.20	$7.20	T	S
Water								

Structure Total	$7.20
Contents Total	$78.25
Room Total	$85.45

ROOM NOTES:

Room: F-Bathroom2 (L=15'0" W=5'4" H=8'0")

cfRoom	640.00	syFlooring	8.89	lfCeiling Perimeter	40.67
sfCeiling	80.00	sfWalls	325.33	lfFloor Perimeter	40.67
sfFloor	80.00			sfWalls/Ceiling	405.33

Object	Service	Qualifier	Quantity	UOM	Price	Total	Tax	Type
Dryer	Clean and Polish		1.00	EA	$10.00	$10.00	T	C
Washer	Clean and Polish		1.00	EA	$10.00	$10.00	T	C

Structure Total	$0.00
Contents Total	$20.00
Room Total	$20.00

ROOM NOTES:

SERVPRO ScanEB™

Date: 02/08/2002 12:16:29 PM Page: 5

Insured: Rauch Thomas

SUMMARY TOTALS:		
STRUCTURE:	$157.00	
CONTENTS:	$752.00	
SUBTOTAL:		$909.00
Add 10.00% OVERHEAD	$0.00	
Add 10.00% PROFIT	$0.00	
TOTAL PROFIT:		$0.00
Taxable Items:	$909.00	
6.00% TAX		$54.54
ESTIMATE TOTAL:		$963.54

CATEGORY TOTAL:	
MITIGATION:	$0.00
RESTORATION:	$963.54
REPLACEMENT	$0.00
	$963.54

SERVPRO Scader™

Special Limits Involved:

Special Limit Category	Item Limit	Amount Over	Aggregate Limit	Amount Over	Maximum RC Benefits Remaining
(BP) Business Property	.00	.00	1,000.00	.00	**
(FA) Firearms	.00	.00	2,500.00	.00	**
(HC) Home Computer	.00	.00	5,000.00	.00	**
(JF) Jewelry & Fur	1,500.00	.00	2,500.00	.00	**
(MO) Money	.00	.00	200.00	.00	**
(OR) Oriental Rugs	5,000.00	.00	10,000.00	.00	**
(SG) Silver and Goldware	.00	.00	2,500.00	.00	**
(SI) Securities and Negotiable Instruments	.00	.00	1,000.00	.00	**
(ST) Stamps and Trading Cards	.00	.00	2,500.00	.00	**
(TR) Trailers	.00	.00	1,000.00	.00	**
(WC) Watercraft	.00	.00	1,000.00	.00	**

Replacement Cost of Personal Property Notice $833.81

Your policy and/or endorsements to your policy provides replacement cost for personal property items. Only Actual Cash Value can be paid unless items are actually replaced.

Please submit receipts for reimbursement of the Replacement Cost. Your policy provisions allow up to 2 years from date of loss to repair or replace items. The column entitled 'RC BENEFITS REMAINING' lists the maximum amount eligible for payment beyond the Actual Cash Value. When an (**) appears, a special policy limit may apply.

** For each override code, Maximum Replacement Cost Benefits remaining are based on individual policy limitations.

Please refer to the claim number and item number when submitting any receipts for reimbursements.

SUPER 8 MOTEL CLEARFIELD
ROUTE 2, BOX 242 C
CLEARFIELD, PA 16830
PHONE/FAX 814-768-7580

MONA RAUCH
DEACON RD
CLEARFIELD, PA 16830

FOLIO: 52439 ROOM:103 REG:
ARRIVE: 02/18/02 DEPART: 02/28/02
TODAY: 02/28/02
#GUESTS: 2

RATE: 58.49
TIME CHECKED IN: 08:51 TIME CHECKED OUT:

ROOM #	SH	DATE	CD	DESCRIPTION	AMOUNT	BALANCE
103	C	02/18/02	E	ROOM RENT	65.69	65.69
103	C	02/18/02	F	ROOM TAX	3.94	69.63
103	C	02/19/02	E	ROOM RENT	65.69	135.32
103	C	02/19/02	F	ROOM TAX	3.94	139.26
103	A	02/28/02	E	ROOM RENT	65.69	204.95
103	A	02/28/02	F	TAX	3.94	208.89
103	A	02/28/02	E	ROOM RENT	65.69	274.58
103	A	02/28/02	F	TAX	3.94	278.52
103	A	02/28/02	E	ROOM RENT	65.69	344.21
103	A	02/28/02	F	TAX	3.94	348.15
103	A	02/28/02	E	ROOM RENT	65.69	413.84
103	A	02/28/02	F	TAX	3.94	417.78
103	A	02/28/02	E	ROOM RENT	65.69	483.47
103	A	02/28/02	F	TAX	3.94	487.41
103	A	02/28/02	E	ROOM RENT	65.69	553.10
103	A	02/28/02	F	TAX	3.94	557.04
103	A	02/28/02	E	ROOM RENT	65.69	622.73
103	A	02/28/02	F	TAX	3.94	626.67
103	A	02/28/02	E	ROOM RENT	65.69	692.36
103	A	02/28/02	F	TAX	3.94	696.30

H********** TOTAL DUE..... 696.30

ROOM RENT.. 656.90 ROOM TAX... 39.40

WRITE BOX 27970,MNPLS,MN 55427 OR VIEW OR WEBSITE ABOUT PRIVACY.

Signature X_____

Please contact the manager about any issue with your stay. Super 8 Motels, Inc. or affiliates may contact you about goods and services unless you call 877-244-7633 or write to Box 27970, Minneapolis, MN 55427-0970 to opt out. View our Super 8 website about privacy.

SUPER 8 MOTEL CLEARFIELD
ROUTE 2, BOX 242 C
CLEARFIELD, PA 16830
PHONE/FAX 814-768-7580

PRESTON RAUCH
DEACON RD
CLEARFIELD, PA 16830

FOLIO: 52459 ROOM:113 REG:
ARRIVE: 02/18/02 DEPART: 02/28/02
TODAY: 02/28/02
#GUESTS: 1

RATE: 40.39

ROOM #	SH	DATE	CD	DESCRIPTION	AMOUNT	BALANCE
113	C	02/18/02	E	ROOM RENT	40.39	40.39
113	C	02/18/02	F	ROOM TAX	2.42	42.81
113	C	02/19/02	E	ROOM RENT	40.39	83.20
113	C	02/19/02	F	ROOM TAX	2.42	85.62
113	C	02/20/02	E	ROOM RENT	40.39	126.01
113	C	02/20/02	F	ROOM TAX	2.42	128.43
113	C	02/21/02	E	ROOM RENT	40.39	168.82
113	C	02/21/02	F	ROOM TAX	2.42	171.24
113	C	02/22/02	E	ROOM RENT	40.39	211.63
113	C	02/22/02	F	ROOM TAX	2.42	214.05
113	C	02/23/02	E	ROOM RENT	40.39	254.44
113	C	02/23/02	F	ROOM TAX	2.42	256.86
113	C	02/24/02	E	ROOM RENT	40.39	297.25
113	C	02/24/02	F	ROOM TAX	2.42	299.67
113	C	02/25/02	E	ROOM RENT	40.39	340.06
113	C	02/25/02	F	ROOM TAX	2.42	342.48
113	C	02/26/02	E	ROOM RENT	40.39	382.87
113	C	02/26/02	F	ROOM TAX	2.42	385.29
113	C	02/27/02	E	ROOM RENT	40.39	425.68
113	C	02/27/02	F	ROOM TAX	2.42	428.10

********** TOTAL DUE..... 428.10

ROOM RENT.. 403.90 ROOM TAX... 24.20

WRITE BOX 27970,MNPLS,MN 55427 OR VIEW OR WEBSITE ABOUT PRIVACY.

Signature X_____

Please contact the manager about any issue with your stay. Super 8 Motels, Inc. or affiliates may contact you about goods and services unless you call 877-244-7633 or write to Box 27970, Minneapolis, MN 55427-0970 to opt out. View our Super 8 website about privacy.

Checks Accepted ONLY if U.I.P. Member agrees to Super 8 Policies

Arb. 4-26-05

OA

Trial Memorandum

State Farm Insurance Company

NO. 03-1809-cd

VS

Frank Godissart
and
Richard Bloom

Copy sent to:

Richard A. Bell, Esquire, Chairman
John R. Ryan,Esquire
Gary A. Knaresboro,Esquire
Weber Gallagher, Simpson Stapleton
Court Administrator

April 17, 2005

Frank Godissart

Frank Godissart

(1) Frank L. Godissart Contracting went out of business on March First 2000.
(2) Frank contracted Charles Heating Center to install the new boiler and at A meeting with Thomas Rauch Charles Heating informed that he would not install A Power vent for A flue system as it in time soot up He wanted to install A Insulated Flue up the inside corner, Mr. Rauch said no.
(3) Thomas Rauch the next day came to the job site and informed me that he had contracted Richard Bloom to install the heating system.
(4) The heating was installed on 12-1-99 Mr. Bloom And his helper started up The boiler at that time Frank Godissart , Nancy Tillman , Denny Golding and Harvey Shaffner was present when Mr. Bloom tested the boiler and power vent . Mr. Bloom disable the power vent and the boiler shout down. And he retested it three more times. The system at that time had A new 275 gal. Fuel tank and in line fuel filter.
(5) From 12-1-99 to 1-23-02 the boiler had to my understanding NO SERVICE done to it substandard fuel put in the tank. Mr. Bloom Was called two years latter to look at the heating system at that time he discovered that the boiler and the fuel filter was plug with dirt a new tank in two years does not plug up with dirt in to years.
(6) Mr. Bloom informed me on 1-24-04 that he called a factory Representative Mr. Cockrun to look at the boiler and at that time he rewired the power vent this is two years latter.
(7) FRANK GODISSART AT NO TIME WAS CONTACKED ABOUT A PROBLEM WITH THE HEATING SYSTEM FROM THE RAUCHS. I was contacted on April 3, 2003 From State Farm and informed in a letter that I was being sued At no time State Farm Ins. Investigated the clam with me, they instead filed A LAW SUET again me.
(8) It's to my understanding that at no time from the time the boiler was installed until 1-23-02 the boiler had NO SERVICE DONE TO IT, if it did who done the service, if there was a problem with the system who every done the service should have at that time detected a problem with it. Mr. Bloom was been installing heating system for over 30 years with no problems I had myself and (4) other people Present when Mr. Bloom started up the boiler and set the settings and ran it throw varies test the boiler worked fine. The Rauch never had service done until it broke down Two years latter. The suppler of the fuel or the service person should be respectable for the brake down of the boiler and not myself or Mr. Bloom.

Frank L. Godissart

Frank L Godissart

Frank L. Godissart
642 Knepp Rd.
Clearfield Pa. 16830

Office of Court Administrator
Clearfield County Courthouse
230 East Market St. Suite 228
Clearfield Pa. 16830

Arb-8-1605

WEBER GALLAGHER
SIMPSON STAPLETON
FIRES & NEWBY LLP

03-1809-CD

July 16, 2005

David Meholik, Court Administrator
Clearfield Courthouse
230 E. Market Street
Clearfield, PA 16830

Direct Dial: (412) 281-4573
Email: rporada@wglaw.com

RE: Thomas & Mona Rauch v. Richard Bloom & Frank Godissart
No. : 03-1809-CD
Our File Number: 0020444

Dear Mr. Meholik:

Enclosed please find an original Pre-Trial Statement on behalf of the Plaintiff in the above-referenced matter.

By way of copy of this correspondence, the Plaintiff's Pre-Trial Statement has been provided to the Defendants and the Arbitrators in accordance with Local Rule 1306A.

Thank you for your kind assistance in this regard. Should you have any questions or concerns, please do not hesitate to contact me.

Very truly yours,

Renee M. Porada

Renee M. Porada

RMP:RMP
Enclosures
cc: Frank Godissart
Richard Bloom
Richard A. Bell, Esquire
Kimberly M. Kubista, Esquire
Ronald L. Collins, Esquire

CA

IN THE COURT OF COMMON PLEAS OF CLEARFIELD COUNTY, PENNSYLVANIA

STATE FARM INSURANCE COMPANY , as subrogee of Thomas and Mona Rauch,

Plaintiff,

vs.

FRANK GODISSART and RICHARD BLOOM,

Defendants.

CIVIL DIVISION—ARBITRATION

NO.: 03-1809-CD

PRE-TRIAL STATEMENT PURSUANT TO LOCAL RULE 1306A

Filed on behalf of Plaintiff:
State Farm Insurance Company as subrogee of Thomas and Mona Rauch

Counsel of Record for This Party:

Christopher P. Deegan, Esquire
PA I.D. # 85635

Renee M. Porada, Esquire
PA I.D. # 89604

WEBER GALLAGHER SIMPSON
STAPLETON FIRES & NEWBY LLP
Firm #594
2 Gateway Center
Suite 1450
Pittsburgh, PA 15222
Phone: (412) 281-4541
Fax: (412) 281-4547

IN THE COURT OF COMMON PLEAS OF CLEARFIELD COUNTY, PENNSYLVANIA

STATE FARM INSURANCE COMPANY , as subrogee of Thomas and Mona Rauch,

Plaintiff,

vs.

FRANK GODISSART and RICHARD BLOOM,

Defendants.

CIVIL DIVISION—ARBITRATION

NO.: 03-1809-CD

PRE-TRIAL STATEMENT PURSUANT TO LOCAL RULE 1306A

And now comes the Plaintiff, State Farm Insurance Company as subrogee of Thomas and Mona Rauch, by and through its counsel, Christopher P. Deegan, Esquire, Renee M. Porada, Esquire and Weber Gallagher Simpson Stapleton Fires & Newby, LLP and files the following Pre-Trial Statement Pursuant to Local Rule 1306A.

A. Brief Statement of the Case

At all times relevant hereto the Rauch residence was covered by a policy of insurance issued by State Farm Insurance Company. Frank Godissart was the contractor responsible for the construction of the Rauch residence. As part of the construction of the Rauch residence, Godissart subcontracted Richard Bloom to install a Slant Fin Corporation Liberty II oil-fired hot water boiler (boiler) in the Rauch residence. Bloom installed the Boiler in the Rauch residence in or about the fall of 1999. On or about January 23, 2002, black soot discharged from the hot water boiler throughout the Rauch residence causing severe soot damage to the home and its contents and forcing the Rauch family to obtain alternative living arrangements for a period of time following the incident. The soot emission was the direct result of the failure of Bloom to properly install the boiler and its component and auxiliary equipment.

Bloom's failure to properly install the boiler and its component and auxiliary equipment constituted negligence and breach of contract. Godissart was negligent and breached his contract with regard to the Rauch residence in subcontracting the installation of the boiler to Bloom who negligently installed the same.

B. Citation to Applicable Case or Statute

The Plaintiff intends to rely upon the general law of contract as well as the law of negligence. The Plaintiff does not believe that this matter raises any novel issues of law.

C. List of Witnesses

Thomas Rauch

Mona Rauch

Mark Albert Sokalski, P.E. (via report pursuant to PA.R.C.P. 1305)

D. Damages

$20,000.00

All applicable estimates and invoices are attached.

Respectfully submitted,

WEBER GALLAGHER SIMPSON STAPLETON FIRES & NEWBY, LLP

By: Renée M. Porada

Renee M. Porada, Esquire

Attorney for Plaintiff

Date: 7/16/05

CERTIFICATE OF SERVICE

I hereby certify that a true and correct copy of the foregoing Pre-trial Statement has been served by first class U.S. mail, postage prepaid, this 16th day of July, 2005, upon the following parties:

Frank Godissart
RR 2
Clearfield, PA 16830

Richard Bloom
P.O. Box 13
Olanta, PA 16863

Richard A. Bell, Esquire
Bell, Silberblatt & Wood
Post Office Box 670
Clearfield, PA 16830
Arbitrator

Kimberly M. Kubista, Esquire
Belin & Kubista
Post Office Box 1
Clearfield, PA 16830
Arbitrator

Ronald L. Collins, Esquire
Sobel & Collins
118 South Second Street
Clearfield, PA 16830
Arbitrator

Renee M. Porada

Renee M. Porada, Esquire

COLORS GALORE CONTRACTORS
RR 1, BOX 318
CLEARFIELD, PA 16830
(814) 765-6637

STATE FARM FIRE & CASUALTY
CHARTIERS VALLEY CSO
APR 29 2002

March 22, 2002

Mona Rauch

RE: Price quote for vertical blinds.

Hunter Douglas Innerstyle Vertical - Frechang
Vanes Only 3 ½"
Price Chart 11 Fabric

Quantity	Description	Each	Total
30	Vanes @ 82" Net Length	49.00	1,470.00
68	Vanes @ 82" Net Length	49.00	3,332.00
26	Vanes @ 52 ½" Net Length	39.00	1,014.00
1	Valance Insert 110" Net	67.00	67.00
2	Valance Insert 124" Net	71.00	142.00
1	Valance Insert 98" Net	62.00	62.00
			6,087.00
	Discount of 40%		-2,434.80
			3,652.20
	Freight		45.00
			3,697.20
	6% Sales Tax		221.83
			3,919.03
	Installation		250.00
	Total		4,169.03

Pd in Full
1-22-02
M.H.

Room: Basement

LxWxH 40'0" x 30'0" x 8'0"

1,120.00	SF Walls	1,200.00	SF Ceiling	2,320.00	SF Walls & Ceiling
1,200.00	SF Floor	133.33	SY Flooring	140.00	LF Floor Perimeter
320.00	SF Long Wall	240.00	SF Short Wall	140.00	LF Ceil. Perimeter

DESCRIPTION	QUANTITY	UNIT COST	RCV	DEPREC.	ACV
Clean concrete on part of the floor	900.00 SF	0.13	117.00		117.00
Clean light fixture - fluorescent	2.00 EA	5.94	11.88		11.88
Clean door - French (per side)	1.00 EA	9.33	9.33		9.33
Clean foundation wall	1,072.00 SF	0.23	246.56		246.56
Clean floor or roof joist system	1,200.00 SF	0.41	492.00		492.00
Clean light fixture	1.00 EA	4.48	4.48		4.48
Clean door / window opening (per side)	3.00 EA	5.48	16.44		16.44
Clean window unit (per side) 3 - 9 SF	1.00 EA	4.44	4.44		4.44
Contents - move out then reset - Extra large room large amount of contents to move around in the basement	1.00 EA	104.96	104.96		104.96
Room Totals: Basement			**1,007.09**		**1,007.09**

Room: Personal Property

DESCRIPTION	QUANTITY	UNIT COST	RCV	DEPREC.	ACV
General clean - up Clean contents in the basement	5.00 HR	17.26	86.30		86.30
Laundry For washing laundry as a result of the loss	31.00 EA	5.00 *	155.00		155.00
Room Totals: Personal Property			**241.30**		**241.30**

Line Item Totals: 38-P546-670	**1,248.39**	**1,248.39**

Grand Total Areas:

1,120.00	SF Walls	1,200.00	SF Ceiling	2,320.00	SF Walls & Ceiling
1,200.00	SF Floor	133.33	SY Flooring	140.00	LF Floor Perimeter
320.00	SF Long Wall	240.00	SF Short Wall	140.00	LF Ceil. Perimeter

RAUCH, THOMAS

State Farm Insurance Companies

01/28/2002

STRUCTURAL DAMAGE CLAIM POLICY

When you have a covered structural damage claim to your real property, you should know ...

-We want you to receive quality repair work to restore the damages to your property.

-We will provide you with a detailed estimate of the scope of damage and costs of repairs. Should the contractor you select have questions concerning our estimate, they should contact your claim representative directly.

-You may have the repairs made by a contractor of your choice.

-If you select a contractor whose estimate is the same as or lower than our estimate, based on the same scope of damages, we will pay based upon their estimate. If your contractor's estimate is higher than ours, you should contact your claim representative prior to beginning the repairs.

-State Farm cannot authorize any contractor to proceed with work on your property. Repairs should proceed only with your authorization.

-State Farm does not guarantee the quality of workmanship of any contractor or guarantee that the work will be accomplished within any specific time frame.

-It is understood that the contractor is hired by you, our insured, and that they work for you - not State Farm.

03/28/2002 15:37 3282733

DIRECT INQUIRIES TO:

4324

THE SHERWIN-WILLIAMS CO
ACCOUNTS RECEIVABLE DEPARTMENT
980 BEAVER DR
DU BOIS PA 15801-2514

PHONE NO.: 814 371-7780

ACCOUNT NUMBER	JOB	CREDIT LIMIT	STORE NUMBER
8708-2183-8	01	1501	1174

STMT. DATE	TERMS	PAYMENT DUE
02-28-2002	NET 20TH PROX	03-20-2002

217831
8372

SHERWIN Williams

*******AUTO** ALL FOR AADC 150
HERB BULLERS JR CONTRACTING
RR 5 BOX 200A
BROOKVILLE PA 15825-9516

PREVIOUS BALANCE	CURRENT MONTH CHARGES	CURRENT MONTH CREDIT	ACCOUNT BALANCE
	991.10		991.10

DATE	REFERENCE NO.	TRANSACTION TYPE	BILLING STORE	AMOUNT	TOTAL
CURRENT DUE - OPEN ITEMS					
02-18-2002	14988	CHARGE	1174	452.05	
02-25-2002	17891	CHARGE	1174	224.88	
02-27-2002	19252	CHARGE	1174	314.07	
					991.10

CURRENT	1-30	31-60	PAST DUE 61-90	OVER 90	NET AMOUNT DUE
991.10					991.10

▼ DETACH HERE AND RETURN LOWER PORTION WITH YOUR PAYMENT ▼

▼ CHECK ITEMS BEING PAID		▼ CHECK ITEMS BEING PAID		▼ CHECK ITEMS BEING PAID	
REFERENCE NO.	AMOUNT	REFERENCE NO.	AMOUNT	REFERENCE NO.	AMOUNT
14988	452.05				
17891	224.88				
19252	314.07				

IF ADDRESS CHANGE IS REQUIRED CHECK HERE AND NOTE CHANGES IN SPACE PROVIDED ON REVERSE SIDE.

☐

SEND PAYMENTS TO:

THE SHERWIN-WILLIAMS CO
980 BEAVER DR
DU BOIS PA 15801-2514

AMOUNT DUE 991.10

AMOUNT ENCLOSED

HERB BULLERS JR CONTRACTING

670621838 01 00092 1174 02282002 00009911099

CARPET ONE CLEARFIELD

RT 322 EAST, CLEARFIELD, PA 16830

PHONE 814-765-3357

FIRST NAME	LAST NAME	CLASS	SALESPERSON	CONTACT DATE
SPANKY/MONA	RAUCH	*OWES*	ED	2/25/02

ADDRESS	HOME PHONE	ORDER DATE	INST. DATE
PO BOX 443	7653512	2/25/02	3/8/02

		WORK PHONE	INSTALLER
CLEARFIELD	PA		STEVE

FINANCE TYPE	FINANCE TERMS	FINANCE ACCOUNT #	EVERGUARD/LEES	INVOICE
CASH/CHECK	COD			43.00

AREA	STYLE	COLOR	SIZE	MILL & STATUS
LR/BR/STEPS	SUNDOWN	LONDON FOG	12X122	

PU on draft to Sergio

INSTALLATION INSTRUCTIONS

SOOT DAMAGED CARPET AND PAD

WAREHOUSE CUTS

DIRECTIONS

879 N, L AT LIGHT, PAST BI LO, A FRAME ON RT

CARPET UNITS	PAD TYPE A
162.00	BLK DIA

VINYL UNITS	PAD TYPE B

LAMINATE UNITS

HARD UNITS

MATERIAL	$5,196.76
SALES TAX	
SUBTOTAL	**$5,196.76**
LABOR	
TOTAL	5,196.76
DEPOSIT	
BALANCE DUE	**$5,196.76**

THANK YOU! WE APPRECIATE YOUR BUSINESS

3/4/2002 289036

State Farm Insurance Co.
Denise Serbin
2 Sellers Drive
Altoona PA 16601

Thomas Rauch
P.O.Box 443
Clearfield, PA 16830
Claim # 38-P546-670

SERVPRO of Clearfield County
729 South Brady Street, Suite A
DuBois, PA 15801

2/28/2002

Subcontract:Carpet Reinstall/Install	5,196.76
Subcontract:Painting	4,395.77
Insurance:Fire Damage	6,009.33T
PA Sales Tax	360.56

Minus $250.00 deductible

$15,962.42

Phone: 814-371-4317
Tax ID # 25-1859996

Customer Signature

No One Home

Yellow - Billing Copy Green - Reporting Copy Pink - Customer Copy White - Trainer Back Sheet - Recall File

Date: 02/08/2002 12:16:29 PM Page: 1

SERVPRO Servpro of Clearfield County

729 South Brady St.
Dubois, PA 15801
(814) 371-4317
Fax: (814) 371-4324
Tax ID #: 25-1859996
Email: servpro8650@adelphia.net

ESTIMATE

Insured: Rauch Thomas
Adjuster:
Claim #: 38-P546-670
Policy #:
Estimate Type: Smoke

FNOL Date: 01/24/2002
Agent:
Loss Date: 01/23/2002 11:21:17 AM
Price List: SERVPRO of Clearfield County
Estimator:

Room: Job/Struct

Object	Service	Qualifier	Quantity	UOM	Price	Total	Tax	Type
			0.00			$0.00		

Structure Total	$0.00
Contents Total	$0.00
Room Total	$0.00

ROOM NOTES:

Room: F-Kitchen (L=14'7" W=17'6" H=8'0")

cfRoom	2,041.67	syFlooring	28.36	lfCeiling Perimeter	64.17
sfCeiling	255.21	sfWalls	513.33	lfFloor Perimeter	64.17
sfFloor	255.21			sfWalls/Ceiling	768.54

Object	Service	Qualifier	Quantity	UOM	Price	Total	Tax	Type
Microwave	Clean		1.00	EA	$5.00	$5.00	T	C
Oven	Clean		1.00	EA	$10.00	$10.00	T	C
Refrigerator	Clean		1.00	EA	$15.00	$15.00	T	C
Sinks, Double	Clean		1.00	EA	$10.00	$10.00	T	S
Table, Kitchen	Clean		1.00	EA	$8.50	$8.50	T	C
Chair, Upholstered	Clean and Deodorize		8.00	LF	$12.00	$96.00	T	C
Dishwasher	Clean and Polish		1.00	EA	$8.00	$8.00	T	C
Heat, Baseboard Water	Clean		6.50	LF	$1.20	$7.80	T	S

SERVPRO ScanEB™

Date: 02/08/2002 12:16:29 PM Page: 2

Insured: Rauch Thomas

Structure Total	$17.80
Contents Total	$142.50
Room Total	$160.30

ROOM NOTES:

Room: F-Bedroom (L=10'0" W=9'4" H=8'0")

cfRoom	746.67	syFlooring	10.37	lfCeiling Perimeter	38.67
sfCeiling	93.33	sfWalls	309.33	lfFloor Perimeter	38.67
sfFloor	93.33			sfWalls/Ceiling	402.67

Object	Service	Qualifier	Quantity	UOM	Price	Total	Tax	Type
Beds	Clean		1.00	EA	$12.50	$12.50	T	C
Book Case	Clean		1.00	EA	$10.00	$10.00	T	C
Dresser	Clean		1.00	EA	$10.00	$10.00	T	C
Television, Portable	Clean		1.00	EA	$5.00	$5.00	T	C
Toys	Clean		1.00	HRS	$25.00	$25.00	T	C
Cabinet, Filing	Clean		1.00	EA	$8.00	$8.00	T	C

Structure Total	$0.00
Contents Total	$70.50
Room Total	$70.50

ROOM NOTES:

Room: F-Bathroom (L=11'5" W=5'0" H=8'0")

cfRoom	456.67	syFlooring	6.34	lfCeiling Perimeter	32.83
sfCeiling	57.08	sfWalls	262.67	lfFloor Perimeter	32.83
sfFloor	57.08			sfWalls/Ceiling	319.75

Object	Service	Qualifier	Quantity	UOM	Price	Total	Tax	Type
Heat, Baseboard Water	Clean		5.00	LF	$1.20	$6.00	T	S
Shelving	Clean		12.00	LF	$0.50	$6.00	T	S

SERVPRO SCRIBE™

Date: 02/08/2002 12:16:29 PM Page: 3

Insured: Rauch Thomas

Structure Total	$12.00
Contents Total	$0.00
Room Total	$12.00

ROOM NOTES:

Room: F-Livingroom (L=30'0" W=20'0" H=22'0")

cfRoom	13,200.00	syFlooring	66.67	lfCeiling Perimeter	100.00
sfCeiling	600.00	sfWalls	2,200.00	lfFloor Perimeter	100.00
sfFloor	600.00			sfWalls/Ceiling	2,800.00

Object	Service	Qualifier	Quantity	UOM	Price	Total	Tax	Type
Chair, Upholstered	Clean and Deodorize		3.00	LF	$12.00	$36.00	T	C
Sofa	Clean and Deodorize		10.00	LF	$12.00	$120.00	T	C
Table, Coffee	Clean		1.00	EA	$10.00	$10.00	T	C
Television, Console	Clean		1.00	EA	$10.00	$10.00	T	C
Chair, Upholstered	Clean and Deodorize		8.00	LF	$12.00	$96.00	T	C
Entertainment Center	Clean and Polish		1.00	EA	$30.00	$30.00	T	C
Exercise Equipment	Clean		1.00	EA	$15.00	$15.00	T	C
Table, Dining	Clean and Polish		1.00	EA	$10.00	$10.00	T	C
Table, End	Clean		2.00	EA	$5.00	$10.00	T	C
Lamp, Hurricane	Clean		1.00	EA	$13.00	$13.00	T	C
Clocks	Clean		1.00	EA	$6.00	$6.00	T	C
Planter Stands	Clean		1.00	EA	$6.00	$6.00	T	C
Stereo Speakers	Clean		1.00	EA	$15.00	$15.00	T	C
Stereos	Clean		1.00	EA	$15.00	$15.00	T	C
Lamp with Fabric Shade	Clean and Polish		1.00	EA	$15.00	$15.00	T	C
Blinds,Cloth	Clean		120.00	EA	$1.00	$120.00	T	S
Rug, Area	Hot Water Extraction		35.00	SF	$0.25	$8.75	T	C
Contents, Misc.	Clean		1.00	HRS	$25.00	$25.00	T	C

Structure Total	$120.00
Contents Total	$440.75
Room Total	$560.75

ROOM NOTES:

SERVPRO Scan ER™

Insured: Rauch Thomas

Room: F-Bedroom2 (L=17'10" W=14'8" H=8'0")

cfRoom	2,092.44	syFlooring	29.06	lfCeiling Perimeter	65.00
sfCeiling	261.56	sfWalls	520.00	lfFloor Perimeter	65.00
sfFloor	261.56			sfWalls/Ceiling	781.56

Object	Service	Qualifier	Quantity	UOM	Price	Total	Tax	Type
Dresser	Clean		2.00	EA	$10.00	$20.00	T	C
Bed, Post/Spindle	Clean		1.00	EA	$25.00	$25.00	T	C
Night Stand	Clean		1.00	EA	$5.25	$5.25	T	C
Cabinet, Gun	Clean		1.00	EA	$10.00	$10.00	T	C
Lamp, Crystal	Clean		1.00	EA	$13.00	$13.00	T	C
Television, Portable	Clean		1.00	EA	$5.00	$5.00	T	C
Heat, Baseboard	Clean		6.00	LF	$1.20	$7.20	T	S
Water								

Structure Total	$7.20
Contents Total	$78.25
Room Total	$85.45

ROOM NOTES:

Room: F-Bathroom2 (L=15'0" W=5'4" H=8'0")

cfRoom	640.00	syFlooring	8.89	lfCeiling Perimeter	40.67
sfCeiling	80.00	sfWalls	325.33	lfFloor Perimeter	40.67
sfFloor	80.00			sfWalls/Ceiling	405.33

Object	Service	Qualifier	Quantity	UOM	Price	Total	Tax	Type
Dryer	Clean and Polish		1.00	EA	$10.00	$10.00	T	C
Washer	Clean and Polish		1.00	EA	$10.00	$10.00	T	C

Structure Total	$0.00
Contents Total	$20.00
Room Total	$20.00

ROOM NOTES:

SERVPRO ScanEB™

Date: 02/08/2002 12:16:29 PM Page: 5

Insured: Rauch Thomas

SUMMARY TOTALS:		
STRUCTURE:	$157.00	
CONTENTS:	$752.00	
SUBTOTAL:		$909.00
Add 10.00% OVERHEAD	$0.00	
Add 10.00% PROFIT	$0.00	
TOTAL PROFIT:		$0.00
Taxable Items:	$909.00	
6.00% TAX		$54.54
ESTIMATE TOTAL:		$963.54

CATEGORY TOTAL:	
MITIGATION:	$0.00
RESTORATION:	$963.54
REPLACEMENT	$0.00
	$963.54

SERVPRO Scaber™

Special Limits Involved:

Special Limit Category	Item Limit	Amount Over	Aggregate Limit	Amount Over	Maximum RC Benefits Remaining
(BP) Business Property	.00	.00	1,000.00	.00	**
(FA) Firearms	.00	.00	2,500.00	.00	**
(HC) Home Computer	.00	.00	5,000.00	.00	**
(JF) Jewelry & Fur	1,500.00	.00	2,500.00	.00	**
(MO) Money	.00	.00	200.00	.00	**
(OR) Oriental Rugs	5,000.00	.00	10,000.00	.00	**
(SG) Silver and Goldware	.00	.00	2,500.00	.00	**
(SI) Securities and Negotiable Instruments	.00	.00	1,000.00	.00	**
(ST) Stamps and Trading Cards	.00	.00	2,500.00	.00	**
(TR) Trailers	.00	.00	1,000.00	.00	**
(WC) Watercraft	.00	.00	1,000.00	.00	**

Replacement Cost of Personal Property Notice $833.81

Your policy and/or endorsements to your policy provides replacement cost for personal property items. Only Actual Cash Value can be paid unless items are actually replaced.

Please submit receipts for reimbursement of the Replacement Cost. Your policy provisions allow up to 2 years from date of loss to repair or replace items. The column entitled 'RC BENEFITS REMAINING' lists the maximum amount eligible for payment beyond the Actual Cash Value. When an (**) appears, a special policy limit may apply.

** For each override code, Maximum Replacement Cost Benefits remaining are based on individual policy limitations.

Please refer to the claim number and item number when submitting any receipts for reimbursements.

SUPER 8 MOTEL CLEARFIELD
ROUTE 2, BOX 242 C
CLEARFIELD, PA 16830
PHONE/FAX 814-768-7580

MONA RAUCH
DEACON RD
CLEARFIELD, PA 16830

FOLIO: 52439 ROOM:103 REG:
ARRIVE: 02/18/02 DEPART: 02/28/02
TODAY: 02/28/02
#GUESTS: 2

RATE: 58.49
TIME CHECKED IN: 08:51 TIME CHECKED OUT:

ROOM #	SH	DATE	CD	DESCRIPTION	AMOUNT	BALANCE
103	C	02/18/02	E	ROOM RENT	65.69	65.69
103	C	02/18/02	F	ROOM TAX	3.94	69.63
103	C	02/19/02	E	ROOM RENT	65.69	135.32
103	C	02/19/02	F	ROOM TAX	3.94	139.26
103	A	02/28/02	E	ROOM RENT	65.69	204.95
103	A	02/28/02	F	TAX	3.94	208.89
103	A	02/28/02	E	ROOM RENT	65.69	274.58
103	A	02/28/02	F	TAX	3.94	278.52
103	A	02/28/02	E	ROOM RENT	65.69	344.21
103	A	02/28/02	F	TAX	3.94	348.15
103	A	02/28/02	E	ROOM RENT	65.69	413.84
103	A	02/28/02	F	TAX	3.94	417.78
103	A	02/28/02	E	ROOM RENT	65.69	483.47
103	A	02/28/02	F	TAX	3.94	487.41
103	A	02/28/02	E	ROOM RENT	65.69	553.10
103	A	02/28/02	F	TAX	3.94	557.04
103	A	02/28/02	E	ROOM RENT	65.69	622.73
103	A	02/28/02	F	TAX	3.94	626.67
103	A	02/28/02	E	ROOM RENT	65.69	692.36
103	A	02/28/02	F	TAX	3.94	696.30

H********** TOTAL DUE..... 696.30

ROOM RENT.. 656.90 ROOM TAX... 39.40

WRITE BOX 27970,MNPLS,MN 55427 OR VIEW OR WEBSITE ABOUT PRIVACY.

Signature X_____

Please contact the manager about any issue with your stay. Super 8 Motels, Inc. or affiliates may contact you about goods and services unless you call 877-244-7633 or write to Box 27970, Minneapolis, MN 55427-0970 to opt out. View our Super 8 website about privacy.

SUPER 8 MOTEL CLEARFIELD
ROUTE 2, BOX 242 C
CLEARFIELD, PA 16830
PHONE/FAX 814-768-7580

PRESTON RAUCH
DEACON RD
CLEARFIELD, PA 16830

FOLIO: 52459 ROOM:113 REG:
ARRIVE: 02/18/02 DEPART: 02/28/02
TODAY: 02/28/02
#GUESTS: 1

RATE: 40.39

ROOM #	SH	DATE	CD	DESCRIPTION	AMOUNT	BALANCE
13	C	02/18/02	E	ROOM RENT	40.39	40.39
13	C	02/18/02	F	ROOM TAX	2.42	42.81
13	C	02/19/02	E	ROOM RENT	40.39	83.20
13	C	02/19/02	F	ROOM TAX	2.42	85.62
13	C	02/20/02	E	ROOM RENT	40.39	126.01
13	C	02/20/02	F	ROOM TAX	2.42	128.43
13	C	02/21/02	E	ROOM RENT	40.39	168.82
13	C	02/21/02	F	ROOM TAX	2.42	171.24
13	C	02/22/02	E	ROOM RENT	40.39	211.63
13	C	02/22/02	F	ROOM TAX	2.42	214.05
13	C	02/23/02	E	ROOM RENT	40.39	254.44
13	C	02/23/02	F	ROOM TAX	2.42	256.86
13	C	02/24/02	E	ROOM RENT	40.39	297.25
13	C	02/24/02	F	ROOM TAX	2.42	299.67
13	C	02/25/02	E	ROOM RENT	40.39	340.06
13	C	02/25/02	F	ROOM TAX	2.42	342.48
13	C	02/26/02	E	ROOM RENT	40.39	382.87
13	C	02/26/02	F	ROOM TAX	2.42	385.29
13	C	02/27/02	E	ROOM RENT	40.39	425.68
13	C	02/27/02	F	ROOM TAX	2.42	428.10

********** TOTAL DUE..... 428.10

ROOM RENT.. 403.90 ROOM TAX... 24.20

WRITE BOX 27970,MNPLS,MN 55427 OR VIEW OR WEBSITE ABOUT PRIVACY.

Signature X_____

Please contact the manager about any issue with your stay. Super 8 Motels, Inc. or affiliates may contact you about goods and services unless you call 877-244-7633 or write to Box 27970, Minneapolis, MN 55427-0970 to opt out. View our Super 8 website about privacy.

Checks Accepted DM X is U.I.D Member access to Super 8 Activities

Arb 8-16-05

In The Court Of Common Pleas Of Clearfield County, Pennsylvania

State Farm Insurance Company, and Thomas and Mona Rauch

Plaintiff, NO; 03-1809-CD

VS.

Frank L Godissart AND richard Bloom,

PRE- TRIAL STATEMENT On behalf of the Defendants.

Copys SENT To;

Richard A. Bell, Esquire
Ronald L. Collins, Esquire
Kimberly M. Kubista, Esquire
Weber Gallagher, Simpson Stapleton
Court Administrator

August 7 2005

Frank L Godissart

Frank L Godissart

(1) Frank L. Godissart Contracting went out of business on March First 2000.
(2) Frank contracted Charles Heating Center to install the new boiler and at A meeting with Thomas Rauch Charles Heating informed that he would not install A Power vent for A flue system as it in time soot up He wanted to install A Insulated Flue up the inside corner, Mr. Rauch said no.
(3) Thomas Rauch the next day came to the job site and informed me that he had contracted Richard Bloom to install the heating system.
(4) The heating was installed on 12-1-99 Mr. Bloom And his helper started up The boiler at that time Frank Godissart , Nancy Tillman , Denny Golding and Harvey Shaffner was present when Mr. Bloom tested the boiler and power vent . Mr. Bloom disable the power vent and the boiler shout down. And he retested it three more times. The system at that time had A new 275 gal. Fuel tank and in line fuel filter.
(5) From 12-1-99 to 1-23-02 the boiler had to my understanding NO SERVICE done to it substandard fuel put in the tank. Mr. Bloom Was called two years latter to look at the heating system at that time he discovered that the boiler and the fuel filter was plug with dirt a new tank in two years does not plug up with dirt in to years.
(6) Mr. Bloom informed me on 1-24-04 that he called a factory Representative Mr. Cockrun to look at the boiler and at that time he rewired the power vent this is two years latter.
(7) FRANK GODISSART AT NO TIME WAS CONTACKED ABOUT A PROBLEM WITH THE HEATING SYSTEM FROM THE RAUCHS. I was contacted on April 3, 2003 From State Farm and informed in a letter that I was being sued At no time State Farm Ins. Investigated the clam with me, they instead filed A LAW SUET again me.
(8) It's to my understanding that at no time from the time the boiler was installed until 1-23-02 the boiler had NO SERVICE DONE TO IT, if it did who done the service, if there was a problem with the system who every done the service should have at that time detected a problem with it. Mr. Bloom was been installing heating system for over 30 years with no problems I had myself and (4) other people Present when Mr. Bloom started up the boiler and set the settings and ran it throw varies test the boiler worked fine. The Rauch never had service done until it broke down Two years latter. The suppler of the fuel or the service person should be respectable for the brake down of the boiler and not myself or Mr. Bloom.